CAAP Quarterly Report

Date of Report: *July 10, 2018*

Contract Number: *DTPH5614HCAP04*

Prepared for: *Arthur Buff, Project Manager, PHMSA/DOT*

Project Title: *Embedded Passive RF Tags towards Intrinsically Locatable Buried Plastic Material*

Prepared by: *Deepak Kumar, Saikat Mondal, Dr. Yiming Deng, Dr. Dan Connors and Dr. Prem Chahal*

Contact Information: *Dr. Yiming Deng (MSU) and Dr. Prem Chahal (MSU)*

For quarterly period ending: *July 10, 2018*

Business and Activity Section

(a) Generated Commitments

Project abstract: Accurate and reliable locating, identifying and characterizing the buried plastic pipes from the ground surface in reducing the likelihood of hit them is critical and imperative to reduce the pipeline incidents. In this collaborative research, a new harmonic radar (frequency doubling) mechanism for smart RF tags design that can detect plastic pipes deeply buried in various soils conditions will be investigated, achieved through efficient tags and highly sensitive readers design, and coupled with intelligent signal processing. The proposed low-cost, small thin-film form passive RF tags can directly be embedded in plastic pipes. It will be able to withstand high temperature processing of plastics and stress involved with horizontal tunneling/drilling of buried pipes. The embedded RF tags have the capability to not only precisely locate the buried plastic pipes, but also have integrated sensing functionality, which can measure the strain-stress changes in the plastic materials. Finally, the vast amount of acquired sensing data from individual tags will be integrated to the advanced signal processing for better data categorization and mining. An innovative prognostics framework for better asset life-cycle management will be developed.

A complete solution is needed that helps in identifying individual buried pipes, their precise location, determining their integrity and sensing for leaks. Buried pipes are expected to have a lifetime of greater than 30 years that are designed to carry a range of liquid and gaseous materials. Among the many pipe technologies, demand for plastic pipes is growing largely because of their low-cost and potential for long life time. Any tags or sensors that are incorporated within these pipes should be able to withstand harsh conditions with a lifetime meeting or exceeding that of the pipes, and should be battery free (passive tag). Furthermore, the overall system should be compact, low-cost, and easy to operate. With advanced techniques to bury the pipes using tunneling approaches it is necessary that tags withstand the associated stress and handling during construction work. Typically, the pipes are buried 3 feet or deeper in the ground and thus the reader should be able to interrogate the tags at these and at higher depths (greater than 5ft is desired).

As summarized in Introduction section, significant advances have been made in the area of electronic tagging of buried objects. However, most of these tags are an afterthought as they are not integral part of the infrastructure. These tags are typically large and are buried along with the objects.

This is simple if open trenching is carried out. However, for plastic pipes that are buried using tunneling this approach will not suffice without making the tags an integral part of the plastic pipe. Furthermore, no RF tags are commercially available that will allow in sensing of the environment and the integrity of the buried object during its life time. Smart RF tag designs are necessary as power harvesting and storage techniques will also have limited life time as the rechargeable batteries (or capacitors) and the associated circuit (e.g., piezo power harvester) will have a limited lifetime. Meanwhile, no advanced data processing algorithms are available for optimally manage and use the vast amount of information embedded into the received RF signals from the proposed new tags. Under this three-year project, the specific technical objectives/goals of the proposed research are:

1) Design and development of new passive harmonic radar based smart RF tags with long range detection guided by industry partners;
2) Design robust and miniature tags such that they can directly be embedded in plastic pipes during manufacturing;
3) Investigate on-tag strain-stress sensing capabilities and efficient data transmission;
4) Investigate new massive RFID data mining, processing and classification algorithms with experimental testing;
5) Develop a Bayesian Learning based pipeline hazardous prognostics methodology using discrete sensing data;
6) Intrinsically locatable pipe materials demonstration and field testing using representative pipe specimens with GPGPU acceleration.

Another equally important objective of this proposed research is to engage MS and PhD students who may later seek careers in this field by exposing them to subject matter common to pipeline safety challenges. Since the project being kicked off, three PhD students from both universities and several MS students have been recruited and trained through this CAAP program and apply their engineering disciplines to pipeline safety and integrity research. The PIs think the educational component is a very important part of the CAAP project and will integrate with research activities with various educational activities to prepare the next generation engineers for gas and pipeline industry. The educational and research impacts sponsored by CAAP has been recognized within the university (see *support letter 3 from Associate Vice Chancellor of university*) and nationally (Two current CAAP-funded students at CU haven been recognized at ASNT annual research symposiums in 2014 and 2015). Specific educational objectives and goals are:

1) Guide and train graduate students at University of Colorado-Denver and Michigan State University for the pipe integrity assessment and risk mitigation;
2) Integrate with existing mechanisms for undergraduate research at University of Colorado-Denver and Michigan State University for early exposure of pipe industry research to potential engineers;
3) Improve the current curriculum teaching at University of Colorado-Denver (ELEC5644 Nondestructive Evaluation and ELEC3817 Engineering Probability and Statistics) and Michigan State University (ECE802-1 Microwave and Millimeter Wave Circuits and ECE802-2 Electronic Systems Packaging) using the achievement from the proposed research;
4) Invite pipe industry expert (see support letters later in this proposal) to deliver seminar/workshops to undergraduate/graduate students about the challenges and opportunities in gas and pipeline industry;
5) Encourage the involved students to apply internships at DOT and industry to gain practical experiences for the potential technology transfer of the developed methodologies.

The above-mentioned goals and objectives of the proposed Competitive Academic Agreement Program (CAAP) project will be well addressed and supported by the proposed research tasks.

Development, demonstrations and potential standardization to ensure the integrity of pipeline facilities will be carried out with the collaborative effort among different universities and our industry partners. The quality of the research results will be overseen by the PIs and program manager and submitted to high-profile and peer-reviewed journals and leading conferences. The proposed collaborative work provides an excellent environment for integration of research and education as well as tremendous opportunities for two universities supported by this DOT CAAP funding mechanism. The graduate students supported by this CAAP research will be heavily exposed to reliability and engineering design topics for emerging pipeline R&D technologies. The PIs have been actively encouraging students to participate in past and ongoing DOT projects and presented papers at national and international conferences. Students who are not directly participating in the CAAP project will also benefit from the research findings through the undergraduate and graduate courses taught by the PIs and attending university-wide research symposium and workshop, e.g. RaCAS at CU-Denver. The proposed research involves pipeline industry to validate and demonstrate scientific results and quantify engineering principles by working closely with industry partners. They will also collaborate with the CAAP team on this research which may include but is not limited to information exchange, mutual meetings, providing CU and MSU with appropriate technical support for the target application.

(b) Status Update of Past Quarter Activities

Task 1 – On-tag Sensing and Signal Processing

A: Wireless Soil Moisture Sensor

Design:
The soil moisture sensor is designed according to the findings of the previous reports that the soil is a dielectric material and changes its permittivity according the added moisture contents. The moisture contents not only increase the relative permittivity but also effects the conductivity. A metamaterial based dielectric sensor is designed which has two square rings coupled to the transmission line for large Q-factor and high sensitivity. The designed sensor follows the metamaterial band pass configuration where the resonance frequency shifts according the dielectric loading over the rings. The designed senor is shown in Fig.1 which dimensions.

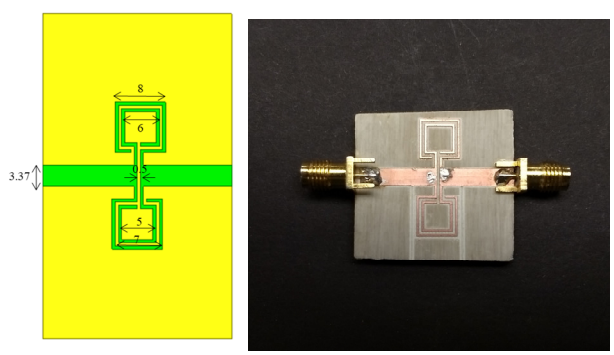

Fig.1 Designed sensor and its dimensions

Simulation results:
The sensor is simulated in Ansys HFSS and the simulated results are shown in Fig.2. The dual ring configuration gives two resonance peaks around 1.5 and 2 GHz. The system is designed to operate at 2 GHz under soil conditions, which further lower down the resonance frequency due to the dielectric loading and allows us to keep the air resonance of at a higher frequency.

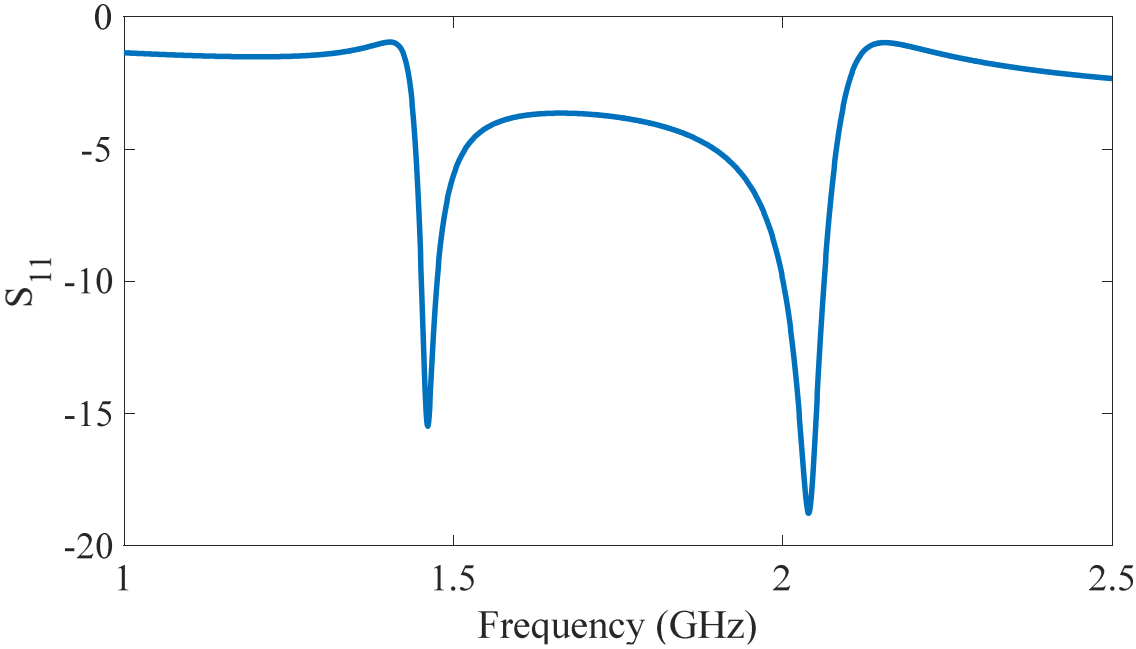

Fig.2 Simulated results of the designed sensor in HFSS

Experimental results:

The designed sensor is fabricated and tested using VNA, the measured frequency response is shown in Fig.3. The measured response is similar to the simulated response with two resonance peaks. The Q-factor of the fabricated sensor is larger and also the resonance frequency is comparatively higher.

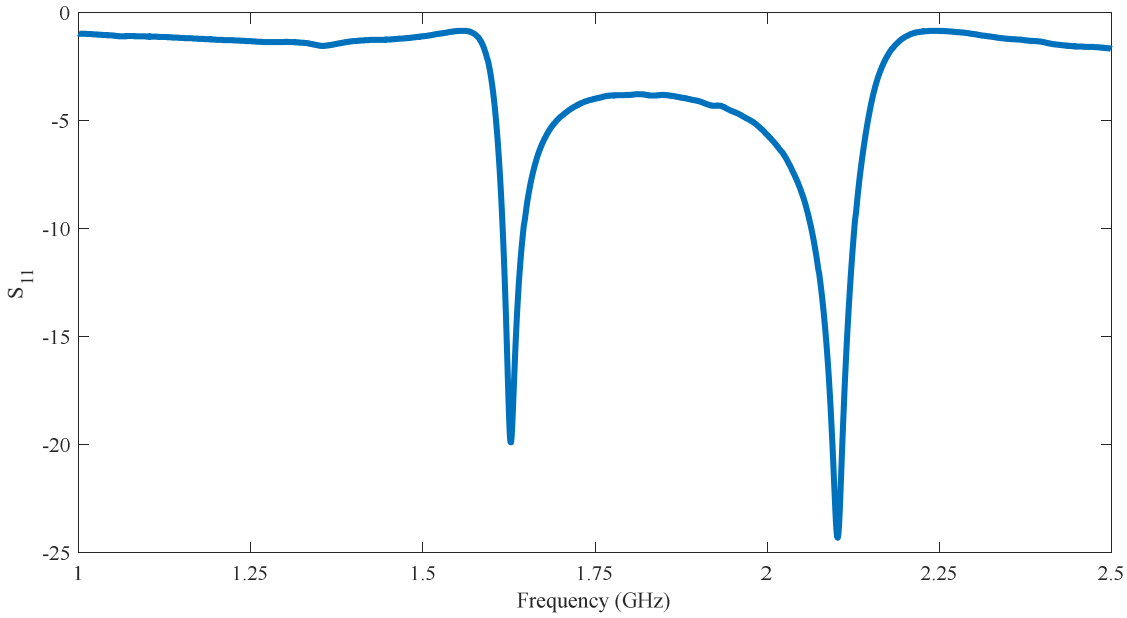

Fig.3 Measured frequency response of the metamaterial based sensor

The sensor is tested using known dielectric loadings, which are three selected Rogers laminates with permittivity of 3.6, 6.0 and 10.0. All selected laminates has a height of 1.52 mm and the respective frequency response is shown in Fig.4. The resonance shift rate is high near low dielectric constant and slower down with the increase in dielectric constant. The shift is consistent towards left with the increase in permittivity.

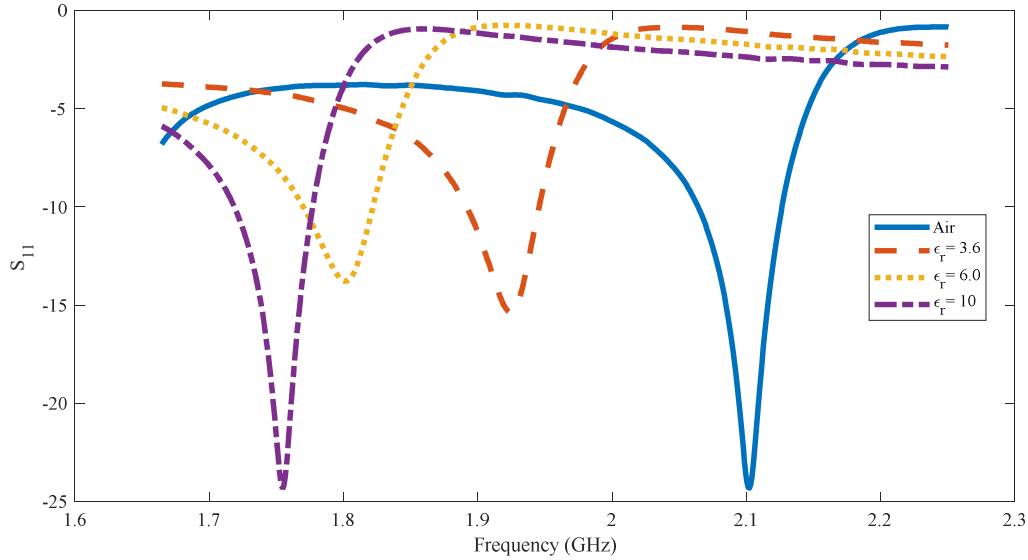

Fig.4 Frequency response with different dielectric loading

The similar dielectric loading experiment is performed using soil and moisture, shown in Fig.5. The dry soil shifts the resonance equivalent to the dielectric constant around 4.0, which has been observed in previous reports under controlled experiments. The added moisture content increased the permittivity and further lower down the resonance peak. It shows that the designed moisture sensor can detect moisture with different percentage.

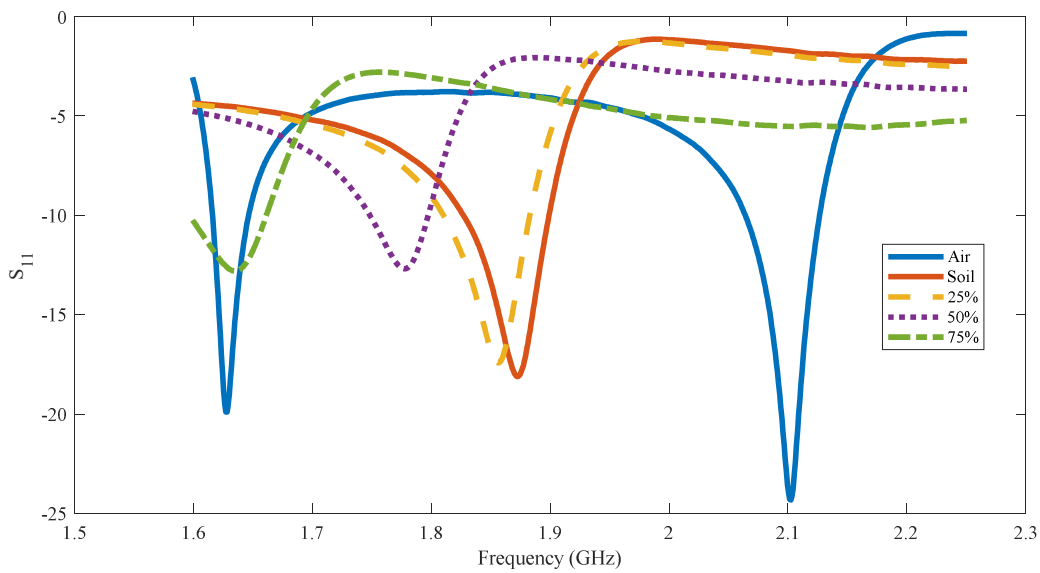

Fig.5 Frequency response due to soil and its moisture content

The next experiment is performed using antennas for wireless communication under soil as shown in Fig.6. The interrogator is placed over a container of soil with a pipe replicating a pipe leak under soil. The sensor integrated with antenna is placed on the pipe and buried under soil. The tag operates at 2 and 4 GHz, where it receive the signal at 2GHz and reflect back at 4 GHz. The integrated moisture sensor effects the reflected power according to the dielectric loadings. Fig.7 shows the change in harmonic received power for the standard dielectric materials. The reflected power lowers down at 4 GHz with the increase in the permittivity. Fig.8 shows the effects from air to soil and the additional moisture contents. The results shown a significant drop in power with loading of sensor and antenna's with the soil and moisture.

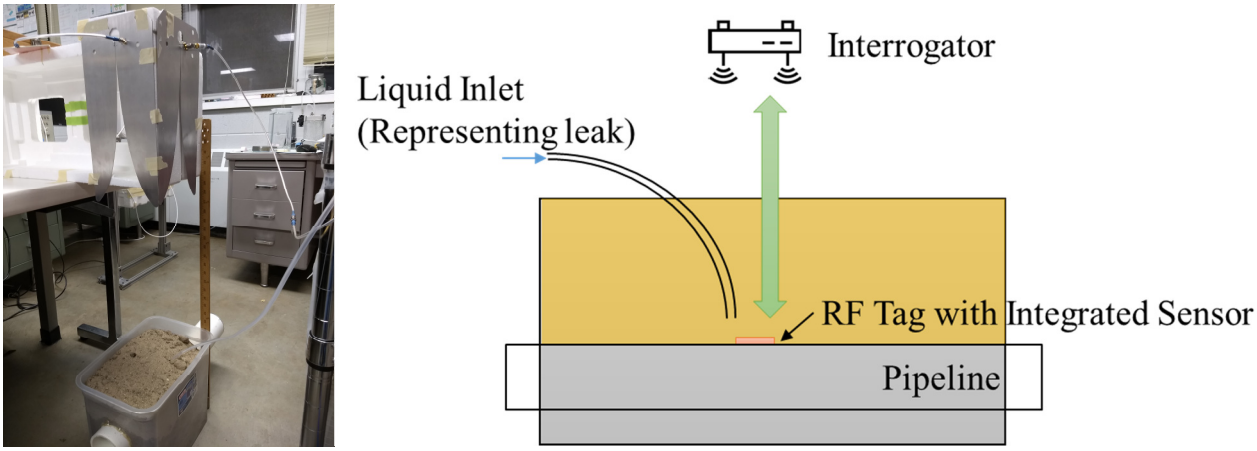

Fig.6 Wireless soil moisture measurement setup with block diagram

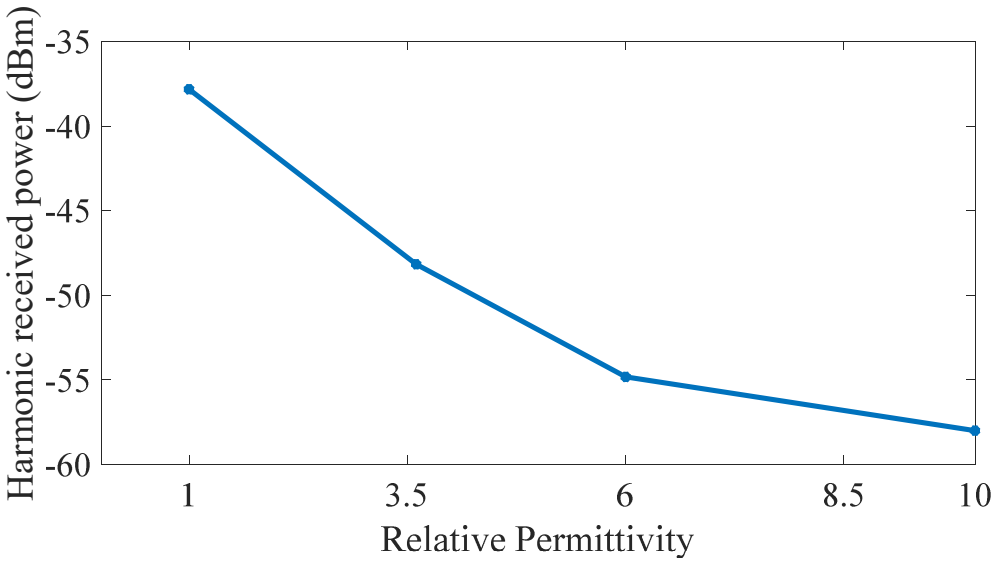

Fig.7 Wireless harmonic received power with dielectric loading

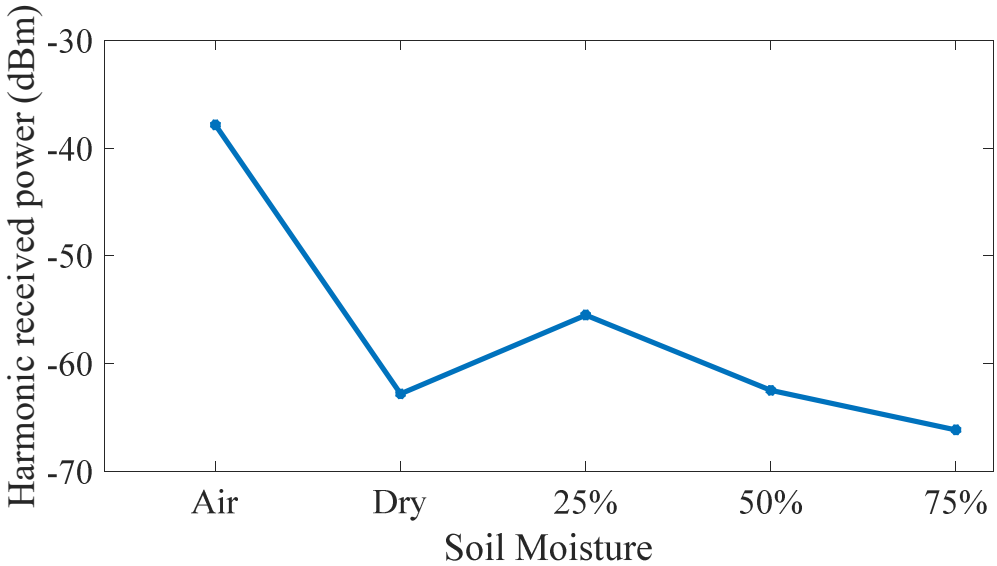

Fig.8 Wireless harmonic received power with soil and moisture content

B: Investigation of data mining for RF sensing data

Data mining technologies have been a field of study in the last decade providing industries with improved and optimized decision making procedure for different applications. The objective of using these techniques is to extract useful and predictive information from large databases for improving the operational efficiency of the industrial supply chain, logistics, inventory tracking, and asset monitoring. Data mining focuses on automating the handling of large data and to extract useful information for multiple applications simultaneously and in an efficient manner. The user issue queries to the data mining algorithms that provides an output accordingly. The mining algorithms should be able to understand the queries and scan through the complete data set for extracting the information. A number of data mining techniques exist that finds data patterns within a large data with or without any prior knowledge and are able to provide the pattern information to predict certain outcomes to optimize and improve the efficiency of the system.

Conventionally the source of data for mining algorithms was manual entries, but recently the trends are changing and industry is moving towards more efficient and automated solution based on RFID's. RFID provides a layer in between physical world with real hardware and digital world with processing algorithms. It provides numerous advantages regarding cost and time. The RFID's can provide the digital information in real time that can be stored in local units or cloud. The data mining algorithms has real-time access to these data pools and able to execute the queries for analysis and prediction.

The concept of data analysis and prediction using data mining is a two-step process. First, the raw data is pre-processed to filter the unwanted data or it can be called data reduction followed by analyzing the filtered data using a data mining algorithm. The functionality of the algorithm is to figure out correlations or patterns among the large data for the purpose of classification, prediction, clustering, association, and analysis. The algorithms are fine-tuned for the type of data being processed. For example, Radio Frequency Identification (RFID) data. In industrial supply chain management, radio frequency identification (RFID) tags are used for real-time product tracking and tracing, inventory tracking, and sensing. These tags generate a huge amount of data periodically such as user ID, geo-location, sensing data and so on. It is a challenge to maintain and analyses a large data base in real-time and hence data mining algorithms plays a crucial role in improving the data analytics to perform real-time changes to the operation of the supply chain.

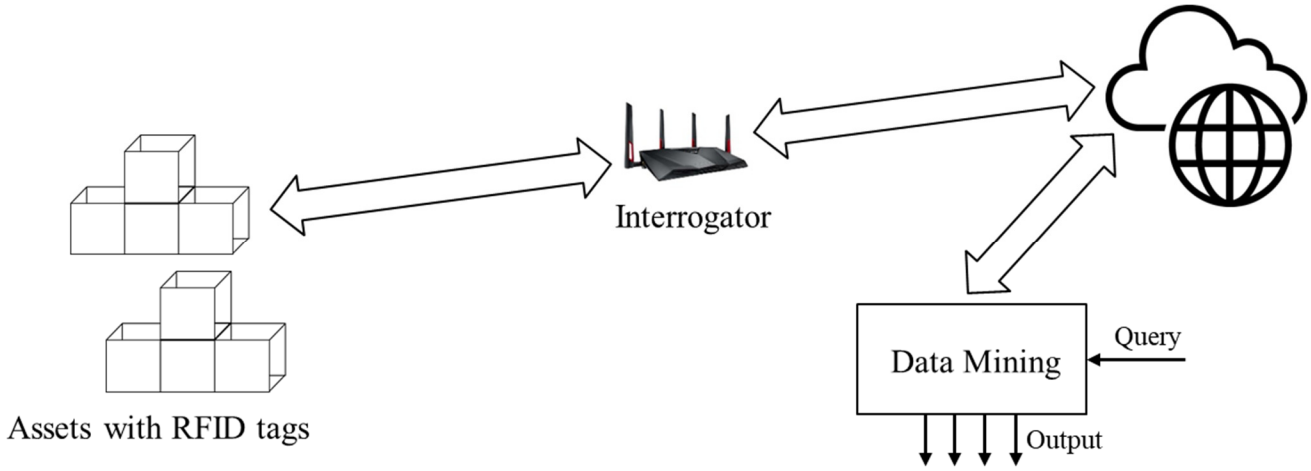

Fig.9 Basic model of RFID based data mining infrastructure

The million miles long pipeline infrastructure requires an automated system for monitoring the transportation medium as well as the flowing asset. RFID based marking systems seems like an appropriate choice but this solution also comes with other challenges. For example, a million mile long pipeline with one RFID tag every 10 m and interrogated once every day would generate 1.6 terabytes of data with 160 million tags generating same amount of tuples (each tuple 10kilobyte with sensing data). The mining over the data logged for several days or months poses a big problem for classification, cluster, and prediction. It requires some very efficient algorithm and a problem specific solution to funnel down the important information.

Pipeline monitoring using RFID sensors can provide location markers for buried pipes as well as sensors for conditional monitoring and predictive maintenance. Interrogating these RFID tags periodically, the data is generated and contains location as well as sensing information. The data needs to be analyzed in order to check the occurrence of events that allow predictive maintenance. A good data mining algorithm is required to classify the data rapidly and alert the stake holders if an event has occurred. For example, analyzing the sensing data to discover a pipe leakage event or to identify the chemical compound it transports and provide information to the location of the leakage in order to promote safety and effective maintenance.

The developed algorithm should be able to classify different cluster of data based on different applications with a time line to provide information on predictive maintenance. Moreover, the algorithm should be able to handle large real-time data to analyses patterns rapidly. For this purpose, an efficient filtering technique is desired that improves the efficiency of the mining technique by reducing data redundancy. Rapid analysis of the real-time data in a cost-effective manner involves usage of lesser storage capacity and ability to decide and discard unwanted data quickly. The algorithm should be able to classify data for multiple events simultaneously such as pipe leakage, corrosion gradient or structural damage and provide real-time feed back to the stake holders. The algorithm should be able to compress data without losing the accuracy of the information since most of these events require physical maintenance such as pipe leakage and has a cost associated with it.

<u>Task 2 – Design and development of passive harmonic radar based smart RF tags</u>

In this report, we would primarily show 1) the high temperature integration of a tag with the pipe material using injection molding, and 2) a complete designed and fabricated tag with antennas.

A: Injection Molding

Plastic injection molding process comprises of blanket covering of the target board using hot-melt. High density Polyethylene (HDPE) is used as the plastic resin for molding the parts. HDPE has the desired characteristics to protect the circuit attached to the pipe from mechanical tear and shear. Additionally, HDPE has the desired thermoplastic properties for molding. HDPE can endure high temperature (~250 °F) and resist different solvents and alcohols. Fig. 10 shows the procedure of plastic molding with the metal mold and tag inside. Spraying the alcohol (or release agent) on surface of the mold is to remove dust and particles on the mold and allow ease of release of parts after molding. To inject HDPE melt, the temperature of nozzle of plastic injecting machine set to approximately 500 °F. This temperature was found to provide a suitable melt and parts with sharp corners could be easily fabricated. To sustain the regular injecting rate, the pressure of the injection machine was set to 50 psi using a nitrogen gas cylinder. Another reason to choose injection molding was it is compatible with regular plastic pipe manufacturing process.

The metallic mold was fabricated using aluminum (Al). A groove was cut inside the metal box to fit the circuit board inside the mold. Metal mold was chosen as it offers very good uniformity and surface

smoothness. The mold frame geometry is shown in Fig. 11 with and without the sample. The mold comes in two pieces, which are clamped together with the sample inside before injection molding. The largest piece the mold can accommodate is 76 cm X 64 cm X 4 cm.

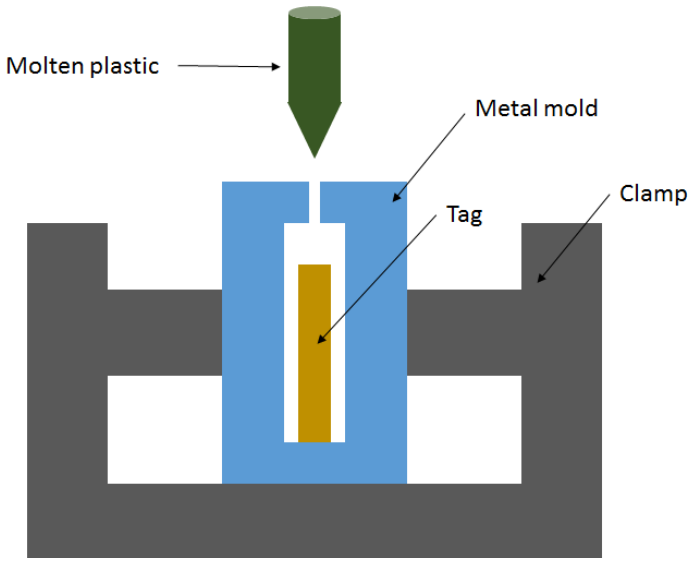

Fig.10 Cross-section view of injection molding process

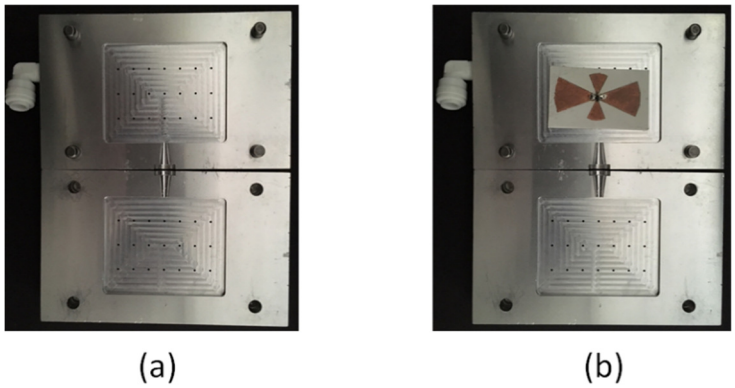

Fig.11 (a) Aluminum mold and (b) Sample within the mold

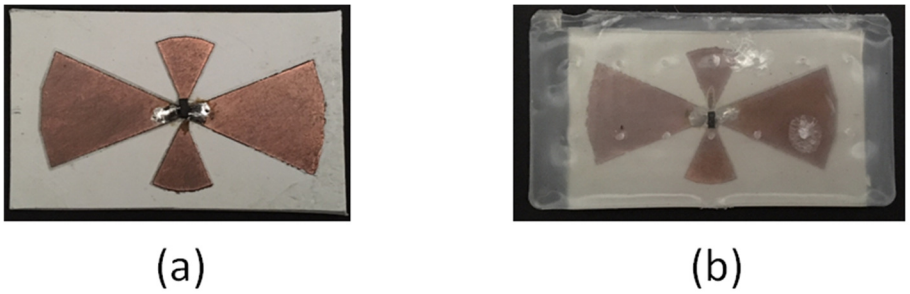

Fig.12 (a) Tag before injection molding and (b) tag after molding

The tag performance was evaluated before and after injection molding and the tag was found to be operating as expected. The glass transition temperature of the soldering iron was around 600 °F which was lower than the molding temperature. The molding time was set low (6 s) so that the molten plastic

would not have enough time to melt the solder. In Fig. 12, the tag is shown before and after injection molding.

B: Complete tag design

The Non-linear Transmission Line (NLTL) based harmonic complete tag with antenna was fabricated as proposed and described in earlier report. A discrete component NLTL based harmonic generator was proposed earlier with different components such as 1) A NLTL and 2) An energy harvesting Circuit individually for the underground application as shown in Fig. 13. In this report all the different components are combined together with antennas to build the complete tag as shown in Fig. 14.

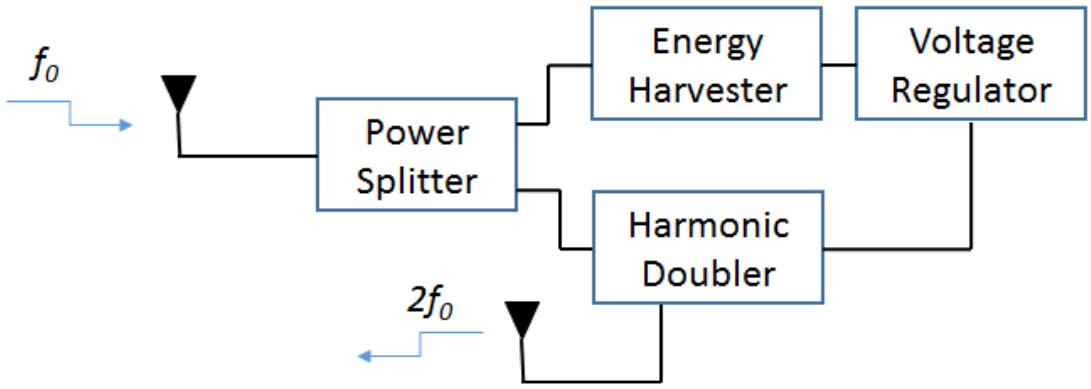

Fig.13 Schematic of the complete harmonic tag

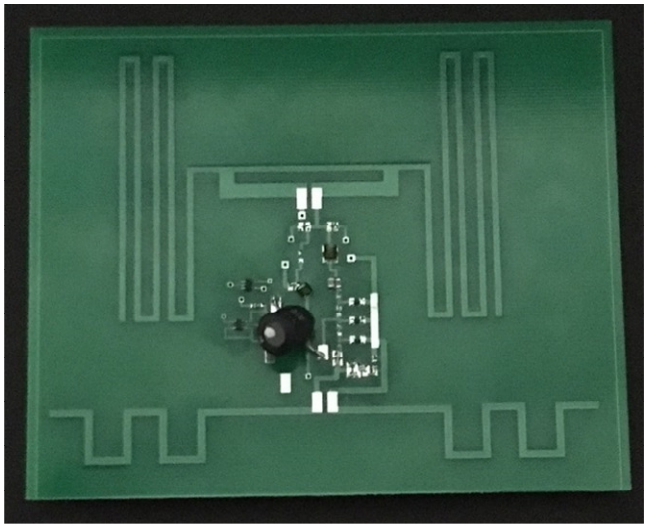

Fig.14 The fabricated complete harmonic tag

Once the tag was designed and fabricated the performance of the tag was analyzed by measuring the tag performance with different distance. As proposed in earlier report, similar instrument setup was used for harmonic power measurement as shown in Fig. 15.

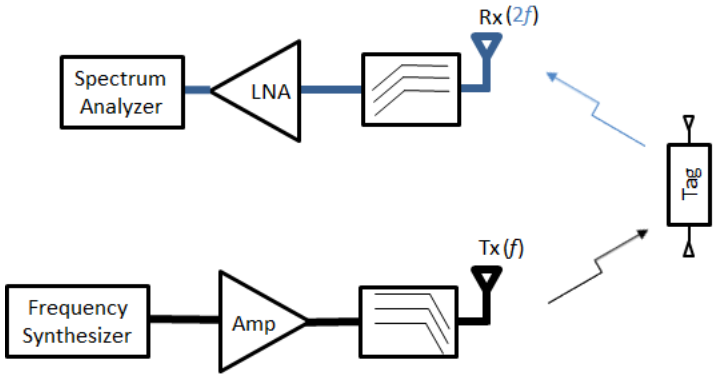

Fig.15 The design of the reader circuit at the left half (shown in earlier report)

The tag harmonic power performance with varying distance is shown in Fig. 16. 30 dBm of power was transmitted at 433 MHz and the harmonic output power was measured at 866 MHz.

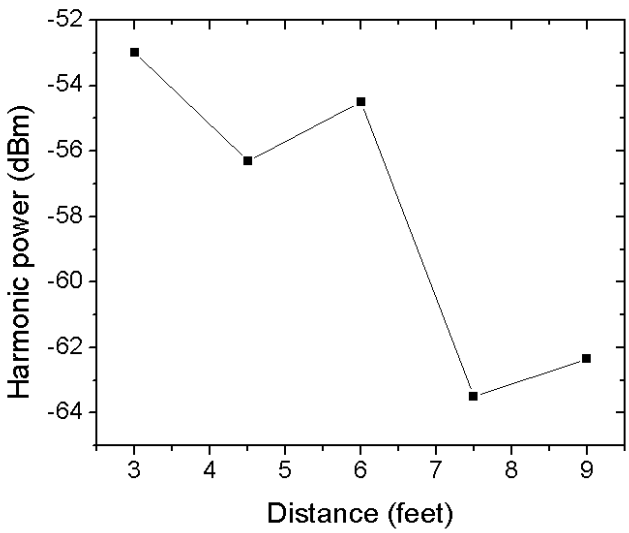

Fig.16 Harmonic power profile of tag with distance

(c) Planned Activities for the Next Quarters

Prepare the final report of the project

- Harmonic RF tag design
- Sensor design
- Signal Processing

References:

1) J. A. Byford, et al., "Fabrication of Terahertz Components using 3D Printed Templates", 66th Electronic Components and Technology Conference, 2016.
2) K. Y. Park, et al., "Plastic Injection Micromolding of THz Circuits and Microfluidic Sensors", 62nd Electronic Components and Technology Conference, 2012.