Strain-Based Design and Assessment in Critical Areas of Pipeline Systems with Realistic Anomalies

Appendix E: Task 10 Full-Scale Test Results
Draft Final Report

Contract No. DTPH56-14-H-00003

Prepared for

US Department of Transportation
Pipeline and Hazardous Materials Safety Administration
Office of Pipeline Safety

Prepared by

Brent Ayton, Jason Bergman, Mark Stephens, Chris Timms

C-FER Technologies

June 24, 2017

Notice

This project was funded by the Department of Transportation, Pipeline and Hazardous Materials Safety Administration under the Pipeline Safety Research and Development Program. The views and conclusions contained in this document are those of the authors and should not be interpreted as representing the official policies, either expressed or implied, of the Pipeline and Hazardous Materials Safety Administration, or the U.S. Government.

This work is the contribution of an agency of the U.S. government, and is not subject to copyright.

Table of Contents

Notice	i
Table of Contents	ii
Nomenclature	E-1
Abbreviations	E-1
Symbols	E-1
Organizations	E-1
Appendix E Task 10 Full-Scale Test Results	E-2
Task 10bl Baseline Burst Test	E-3
Task 10a Corrosion Burst Test	E-10
Task 10b Corrosion Bend and Burst Test 1	E-17
Task 10c Corrosion Bend and Burst Test 2	E-25

Nomenclature

Abbreviations

D	Diameter
D_{min}	Minimum Diameter
D_{may}	Maximum Diameter
D_{nom}	Nominal Diameter
OD	Outside Diameter
ID	Inside Diameter
1D	One Diameter
2D	Two Diameters
SMYS	Specified Minimum Yield Strength
VIC	Visual image correlation,

Symbols

ε	Strain

Organizations

PHMSA	Pipeline and Hazardous Materials Safety Administration,
C-FER	C-FER Technologies Inc. (1999)
CRES	Center for Reliable Energy Systems

Appendix E Task 10 Full-Scale Test Results

Task 10 Baseline Burst Test

Specimen Identification: **10 (Baseline Burst)**
C-FER Specimen Number: **X70-ERW-3-10bl**

C-FER Test Summary: **Rev. 2, June 23, 2017**
Test Date: **November 20, 2015**

Nominal Pipe Characteristics

Nominal OD (mm) =	323.85
Average OD (mm) =	324.91
Nominal Wall Thickness (mm) =	7.14
Average Wall Thickness (mm) =	7.14
Specimen Length (mm) =	2702
Length/OD =	8.3
SMYS (MPa) =	483

Test Loading Procedure

1. The specimen was pressurized 72% SMYS while applying compressive force to compensate for the end cap load

2. The specimen pressure was increased until burst.

72% SMYS (MPa) = 15.3

Test Result

Burst Pressure (MPa) = 30.2

Failure Mode

Pipe body burst with typical longitudinal fracture.

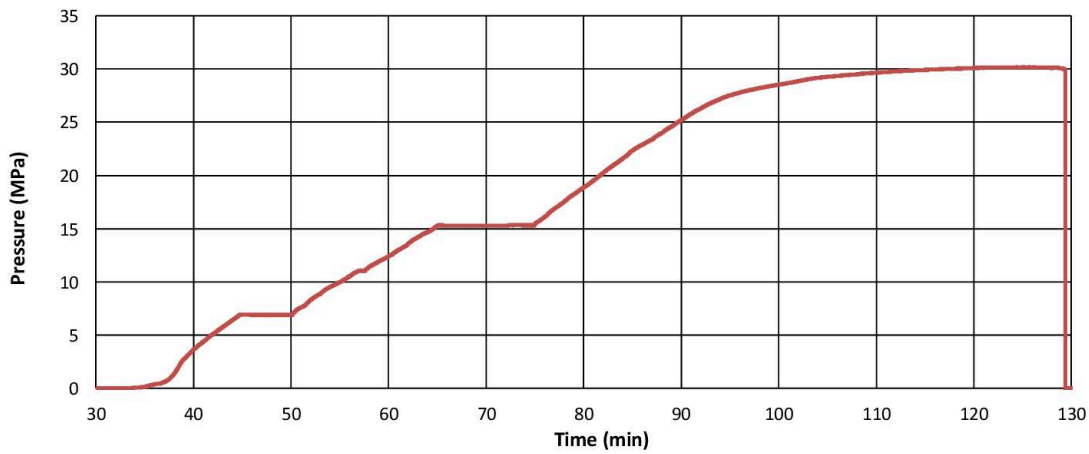

General Comments:

Post Test:

		Title: **Task 10 Baseline Burst Test**	C-FER Technologies
Reviewed: CMJT	Date: 23-Jun-17	Specimen Identification: **10 (Baseline Burst)**	Page 1 of 7

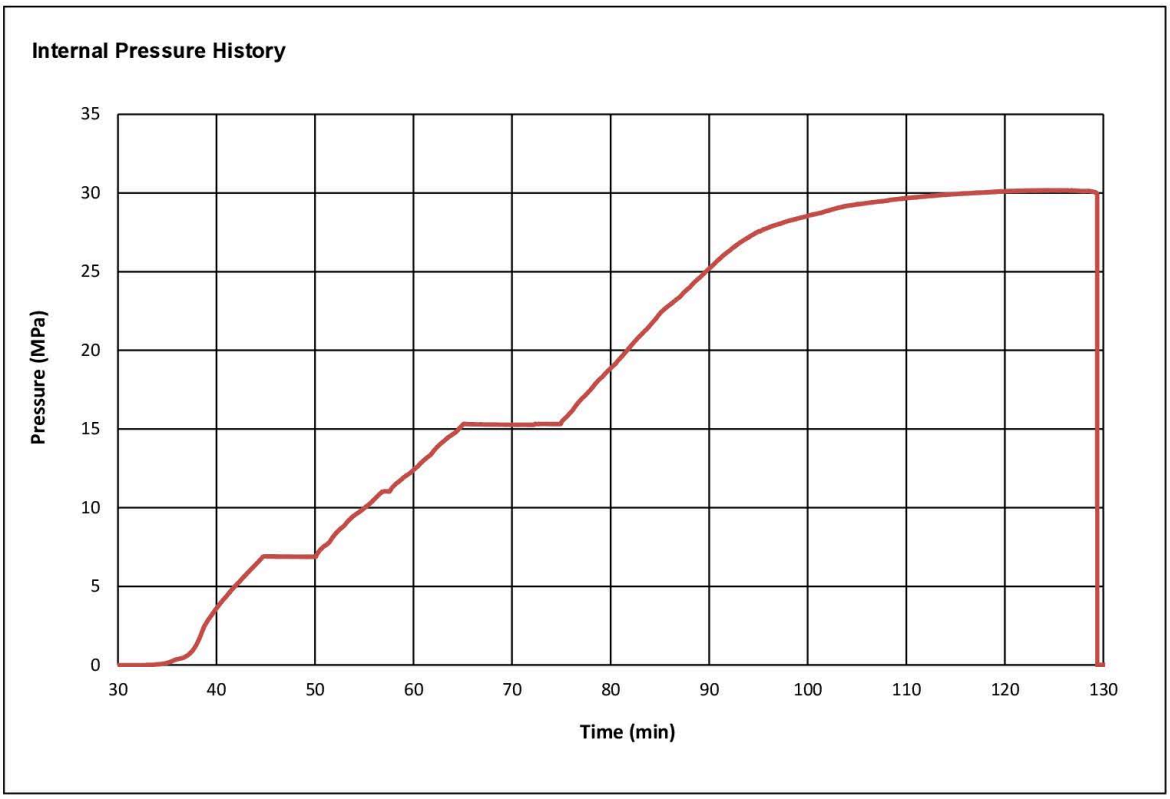

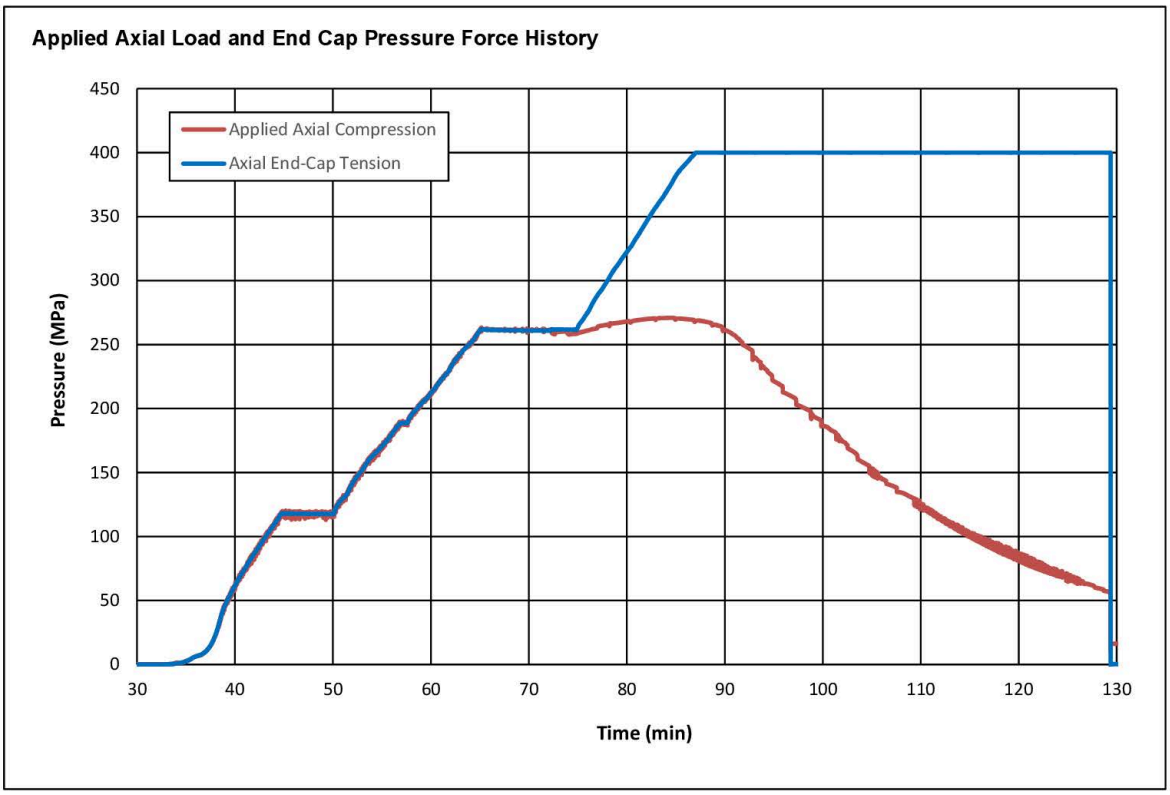

Compiled By:	Date:	Title:	C-FER Technologies
BCA	20-Nov-15	**Task 10 Baseline Burst Test**	
Reviewed:	Date:	Specimen Identification:	Page 2 of 7
CMJT	10-Apr-17	**10 (Baseline Burst)**	

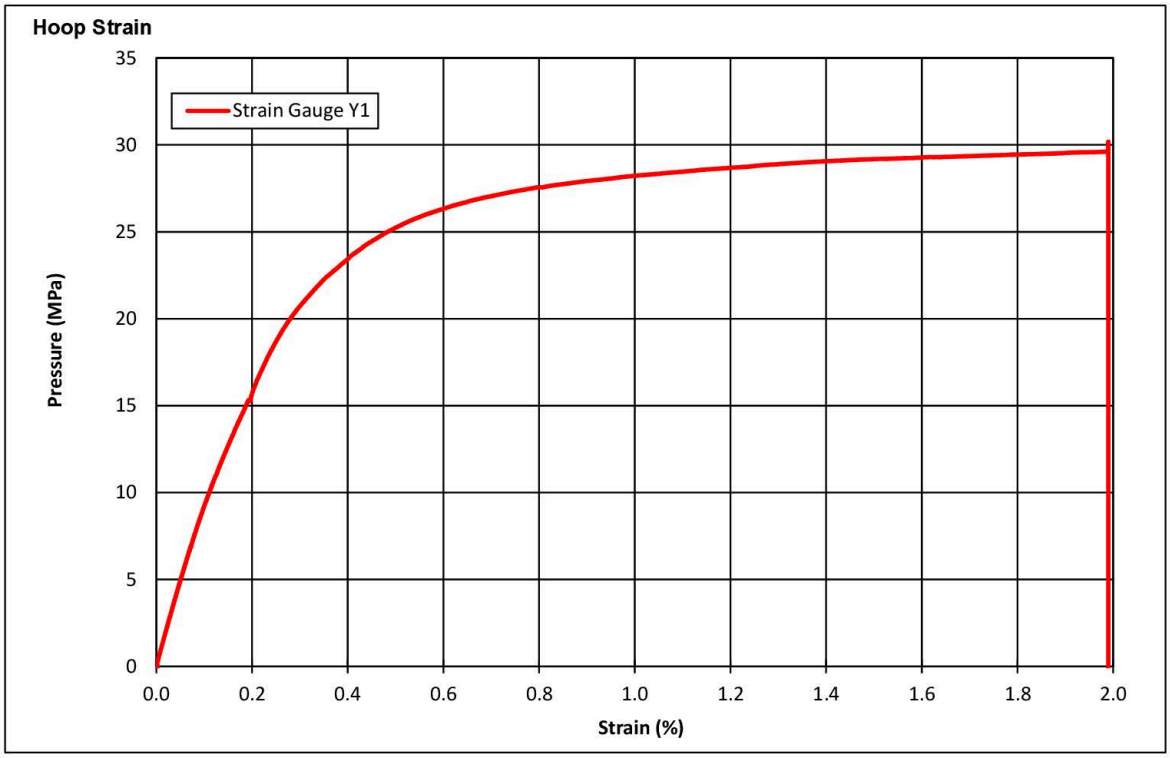

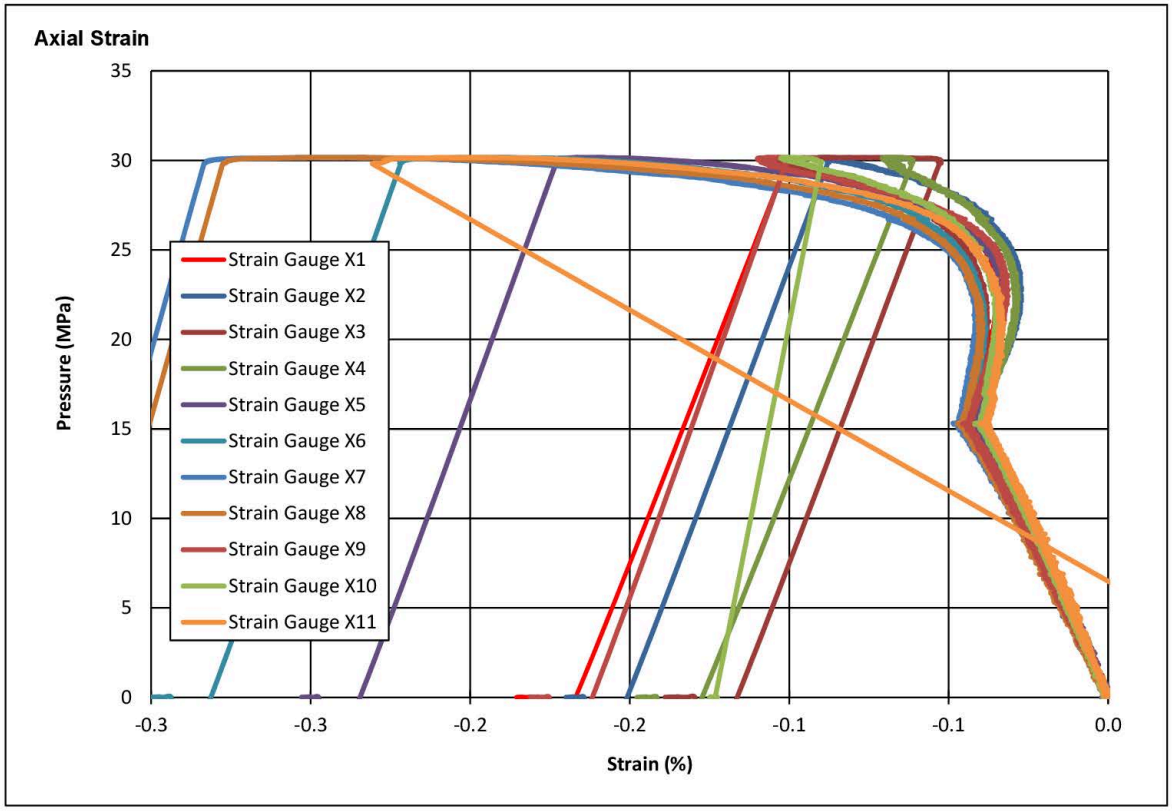

Compiled By:	Date:	Title:	C-FER Technologies
BCA	20-Nov-15	**Task 10 Baseline Burst Test**	
Reviewed:	Date:	Specimen Identification:	Page 3 of 7
CMJT	10-Apr-17	**10 (Baseline Burst)**	

Pipe Measurements

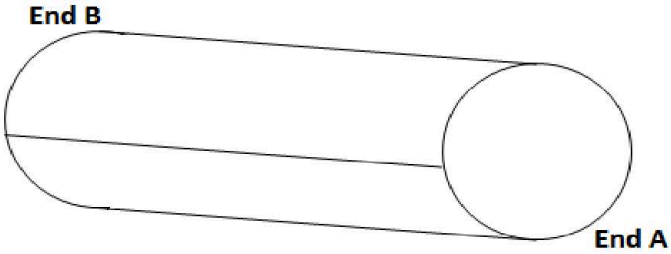

Pipe Specimen

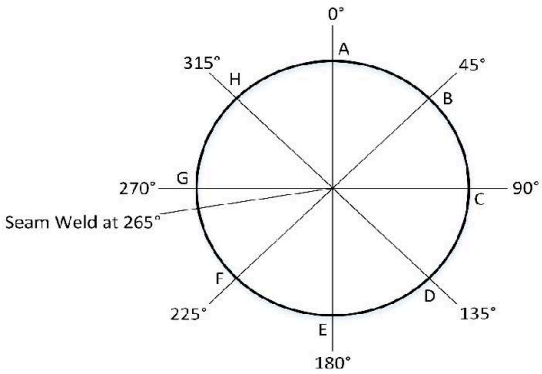

View from End A

Pre test Pup Lengths:

End A to 1	207	mm
1 to 2	325	mm
2 to 3	323	mm
3 to 4	323	mm
4 to 5	325	mm
5 to 6	325	mm
6 to 7	324	mm
7 to 8	324	mm
8 to End B	225	mm
Total Length	2 701	mm

Pre Test Pipe Lengths:

Position B	2 701	mm
Position D	2 702	mm
Position F	2 704	mm
Position H	2 699	mm
Average	2 702	mm

Circumferences:

End A measured circumference	1 024	mm
End B measured circumference	1 024	mm

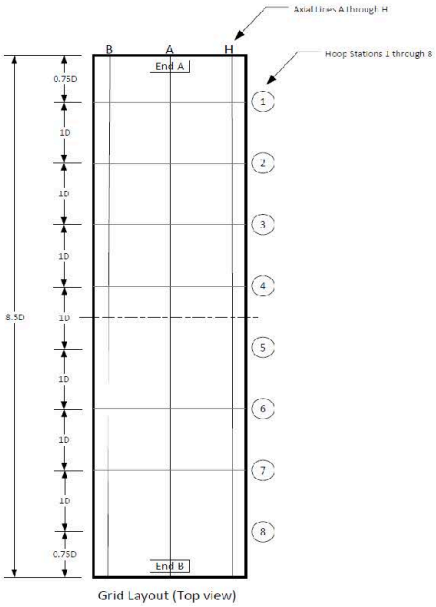

Measurement Grid

Measurements Taken By:	Date:	Title:	C-FER Technologies
TCT	20-Nov-15	**Task 10 Baseline Burst Test**	
Measurements Approved By:	Date:	Specimen Identification:	Page 4 of 7
BCA	19-Nov-15	**10 (Baseline Burst)**	

Diameter Measurements

Micrometer:

Verification Rod 1	0.001	in
Verification Rod 2	0.001	in

Diameters in inches (as measured)

Station	Spanned Positions (in)			
	0° to 180°	45° to 225°	90° to 270°	135° to 315°
1	12.79	12.79	12.80	12.80
2	12.78	12.79	12.80	12.80
3	12.79	12.79	12.80	12.80
4	12.79	12.79	12.79	12.80
5	12.79	12.79	12.79	12.80
6	12.79	12.79	12.80	12.80
7	12.78	12.79	12.79	12.79
8	12.79	12.79	12.80	12.80

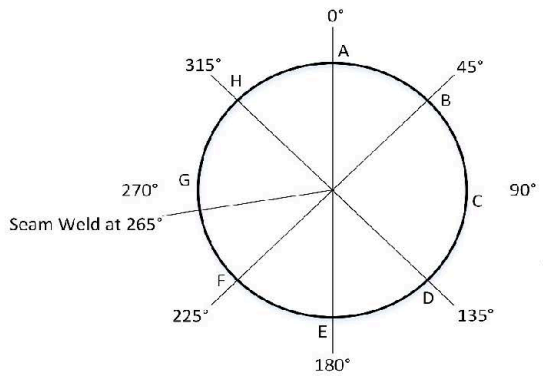

View from End A

Diameters in millimeters (converted)

Station	Spanned Positions (mm)			
	0° to 180°	45° to 225°	90° to 270°	135° to 315°
1	324.74	324.84	325.02	325.04
2	324.64	324.84	325.02	324.99
3	324.84	324.82	325.04	325.17
4	324.84	324.74	324.97	325.07
5	324.79	324.82	324.92	324.99
6	324.74	324.94	325.17	325.07
7	324.71	324.76	324.97	324.84
8	324.84	324.79	325.04	325.02

Station	Max. OD (mm)	@ Position	Min. OD (mm)	@ Position	Average OD (mm)	Standard Deviation (mm)	Ovality* (%)	Ovality incl. angle (°)
1	325.04	135	324.74	0	324.91	0.15	0.09	135
2	325.02	90	324.64	0	324.87	0.18	0.12	90
3	325.17	135	324.82	45	324.97	0.17	0.11	90
4	325.07	135	324.74	45	324.90	0.14	0.10	90
5	324.99	135	324.79	0	324.88	0.09	0.06	135
6	325.17	90	324.74	0	324.98	0.19	0.13	90
7	324.97	90	324.71	0	324.82	0.11	0.08	90
8	325.04	90	324.79	45	324.92	0.13	0.08	45

$$^{*}\ Ovality = \frac{(D_{\max} - D_{\min})}{(D_{nom})} * 100\%$$

Measurements Taken By:	Date:	Title:	C-FER Technologies
TCT	15-Oct-15	**Task 10 Baseline Burst Test**	
Measurements Approved By:	Date:	Specimen Identification:	Page 5 of 7
BCA	19-Nov-15	**10 (Baseline Burst)**	

Wall Thickness Measurements

Micrometer Measurements
Pipe Ring Verification

	Micrometer (mm)	Ultrasonic probe (mm)
End A - Position B	7.100	7.10
End A - Position D	7.130	7.13
End A - Position F	7.120	7.12
End A - Position H	7.030	7.03
End B - Position B	7.200	7.20
End B - Position D	7.170	7.17
End B - Position F	7.040	7.04
End B - Position H	7.080	7.08

Micrometer ID:

Mitutoyo 0-1" (HTS)
1": 1.00020"

Ultrasonic Probe ID:
Dakota Ultrasonics MVX
Velocity: 5901 m/s

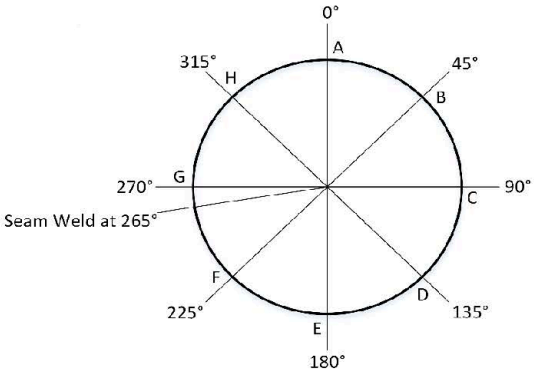

View from End A

Ultrasonic Measurements

Station	Circumferential Position							
	A	B	C	D	E	F	G	H
	Wall Thickness (mm)							
1	7.190	7.260	7.190	7.170	7.170	7.040	7.350	7.170
2	7.120	7.180	7.180	7.170	7.160	7.040	7.320	7.160
3	7.130	7.160	7.180	7.170	7.100	7.110	7.340	7.160
4	7.110	7.170	7.190	7.120	7.110	7.040	7.350	7.140
5	7.040	7.060	7.090	7.100	7.040	7.030	7.350	7.060
6	7.030	7.080	7.080	7.050	6.980	7.010	7.320	6.980
7	7.040	7.120	7.140	7.120	7.040	7.020	7.240	7.030
8	7.130	7.130	7.140	7.180	7.090	7.080	7.340	7.080

Average	7.14 mm
Std. dev	0.09 mm

Measurements Taken By:	Date:	Title:	C-FER Technologies
TCT	15-Oct-15	**Task 10 Baseline Burst Test**	
Measurements Approved By:	Date:	Specimen Identification:	Page 6 of 7
BCA	19-Nov-15	**10 (Baseline Burst)**	

Instrumentation Layout

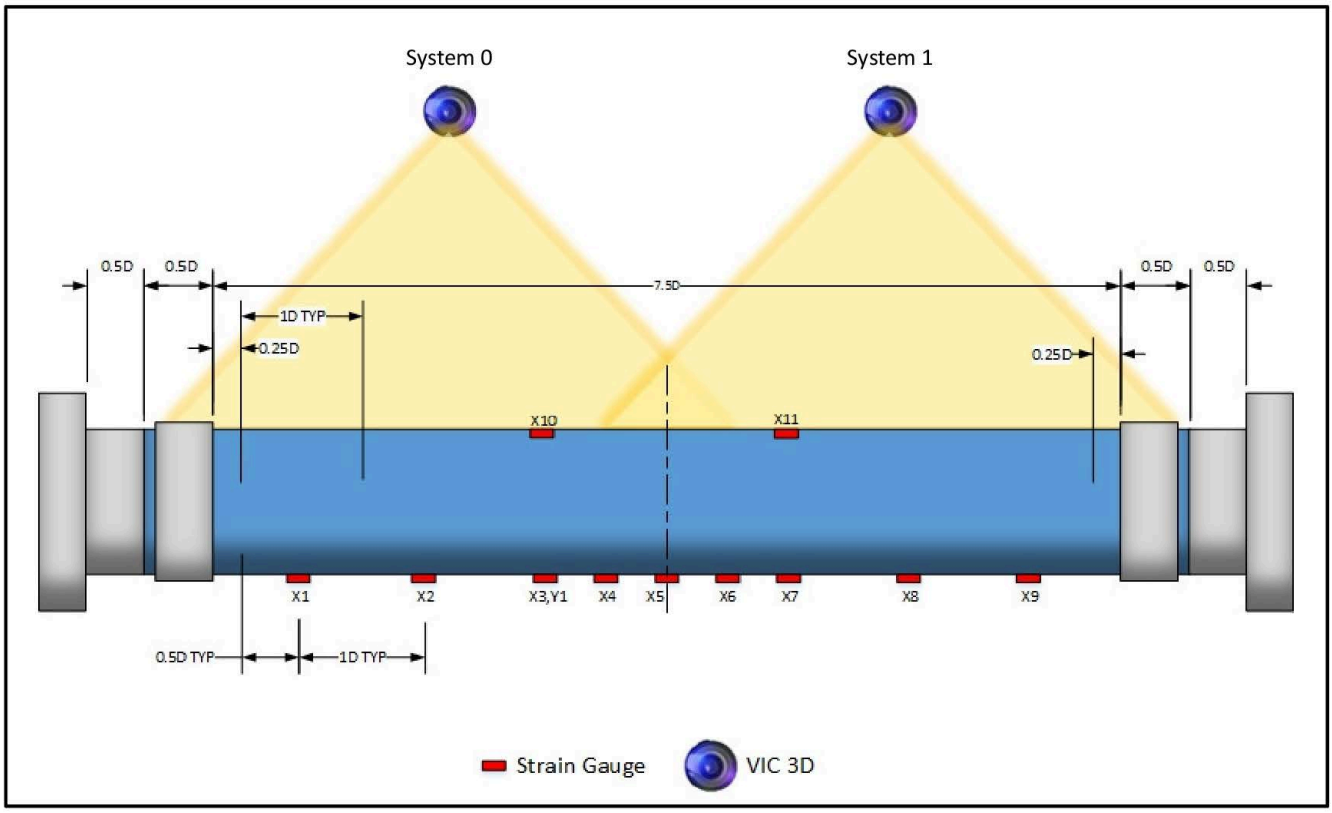

Drawing Done By:	Date:	Title:	C-FER Technologies
BCA	4-Feb-16	**Task 10 Baseline Burst Test**	
Drawing Approved By:	Date:	Specimen Identification:	Page 7 of 7
CMJT	10-Apr-17	**10 (Baseline Burst)**	

Task 10 Corrosion Burst Test

Specimen Identification: **10.a (Corrosion Burst)**
C-FER Specimen Number: **X70-ERW-3-10a**

C-FER Test Summary: **Rev. 2, June 23, 2017**
Test Date: **December 8, 2015**

Nominal Pipe Characteristics

Nominal OD (mm) =	323.85
Average OD (mm) =	324.95
Nominal Wall Thickness (mm) =	7.14
Average Wall Thickness (mm) =	7.15
Specimen Length (mm) =	2711
Length/OD =	8.3
SMYS (MPa) =	483

Test Loading Procedure

1. The specimen was pressurized 72% SMYS while applying compressive force to compensate for the end cap load

2. The specimen pressure was increased until the pipe burst.

72% SMYS (MPa) = 15.3

Test Result

Burst Pressure (MPa) = 27.3

Anomaly - Corrosion Axial Groove

	Length	Width	Depth
Nominal Dimensions	0.2D	0.05D	0.4t
Nominal Dimensions (mm)	64.77	16.19	2.85
Measured Dimensions (mm)	65.0	16.0	2.74

Failure Mode

Pipe body burst with typical longitudinal fracture.

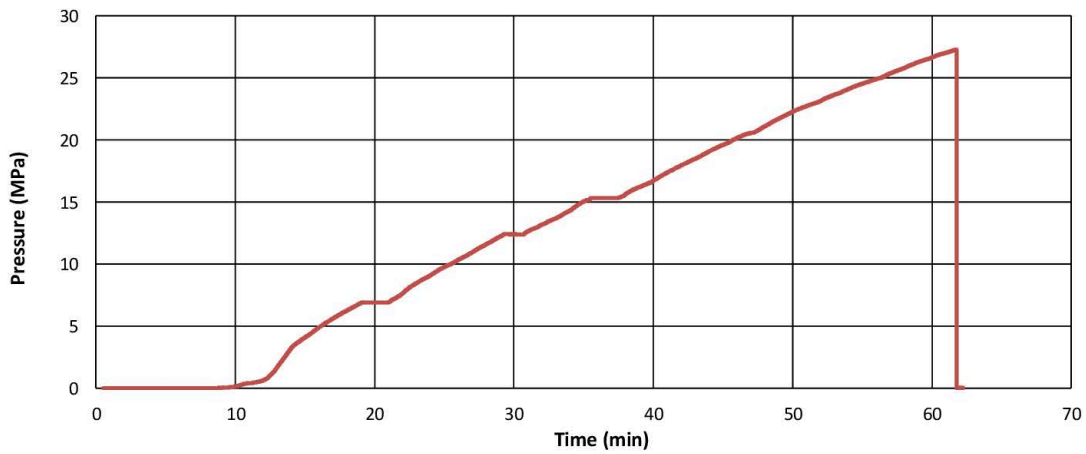

General Comments:

Post Test:

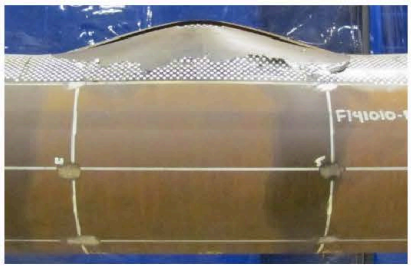

		Title: **Task 10 Corrosion Burst Test**	C-FER Technologies
Reviewed: CMJT	Date: 23-Jun-17	Specimen Identification: **10.a (Corrosion Burst)**	Page 1 of 7

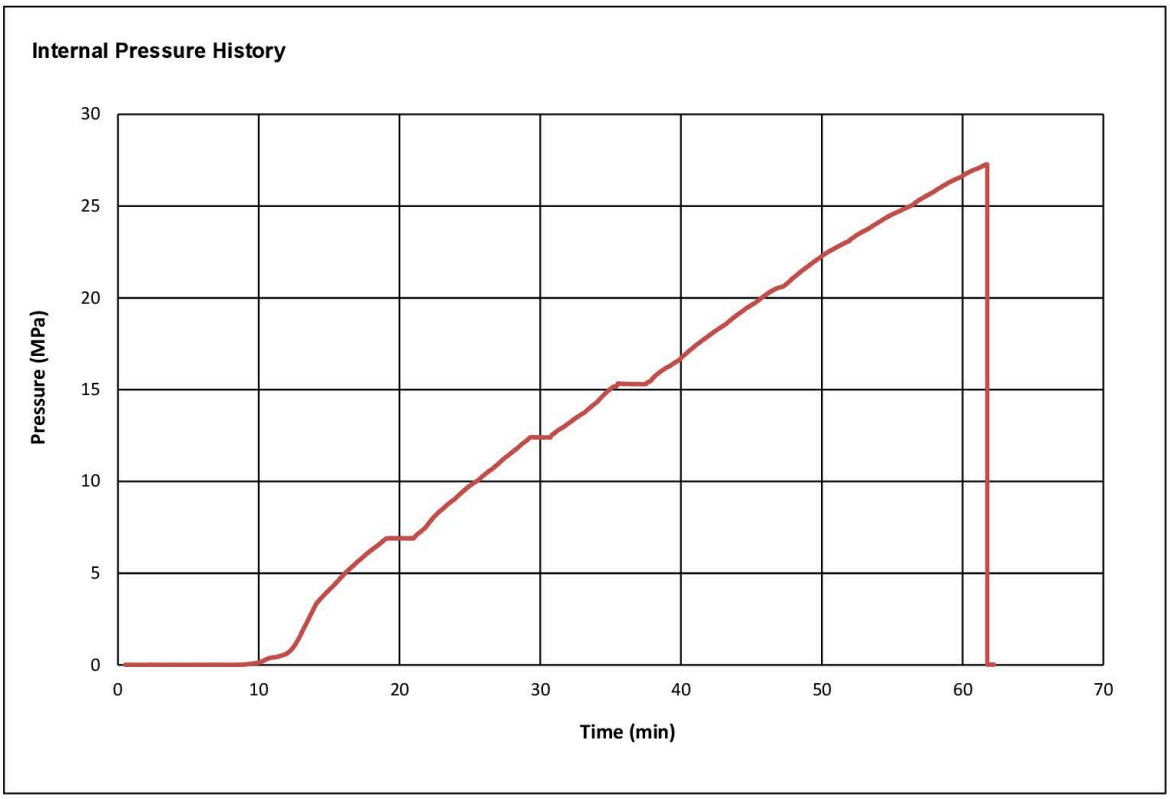

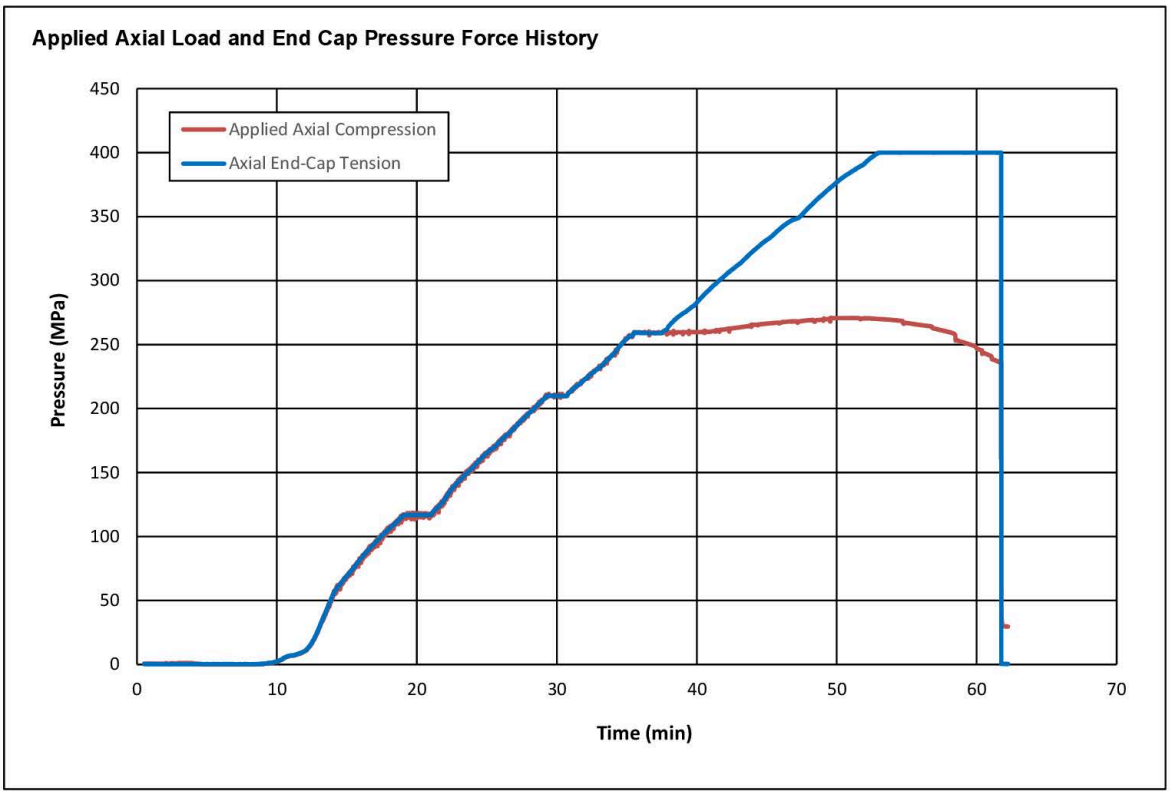

Compiled By:	Date:	Title:	C-FER Technologies
BCA	9-Dec-15	**Task 10 Corrosion Burst Test**	
Reviewed:	Date:	Specimen Identification:	Page 2 of 7
CMJT	20-Apr-17	**10.a (Corrosion Burst)**	

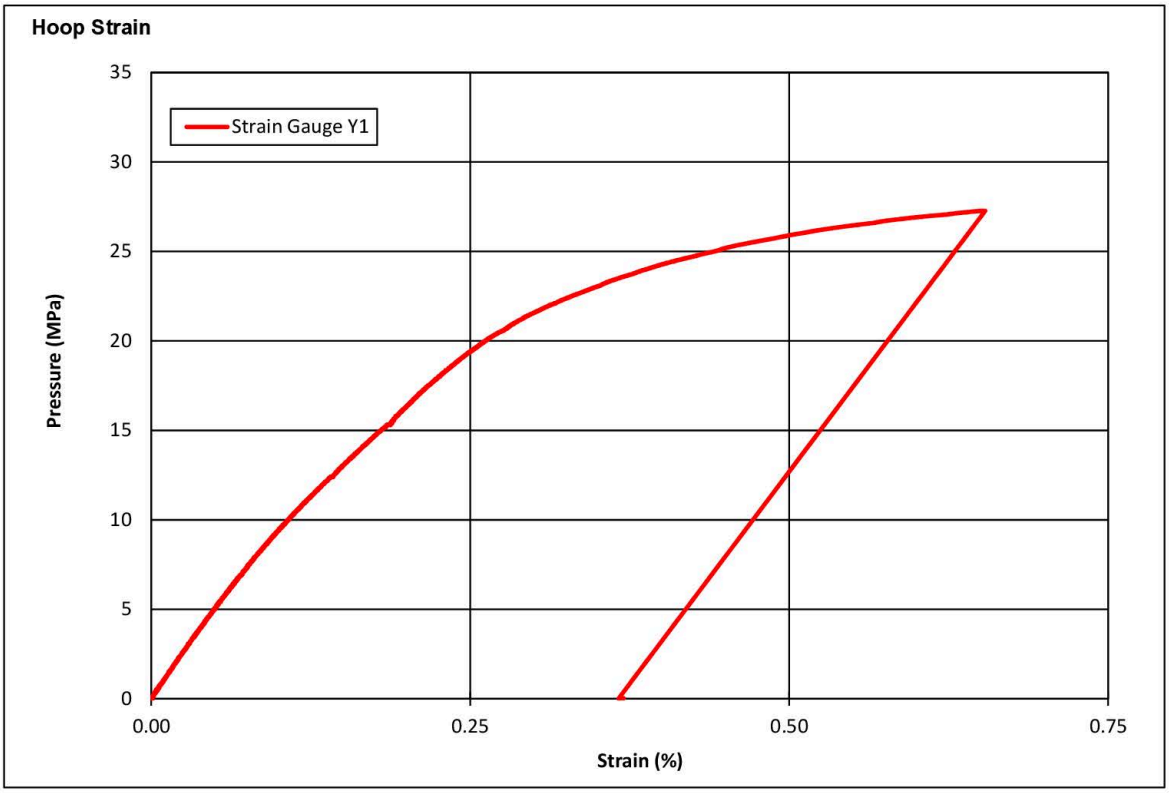

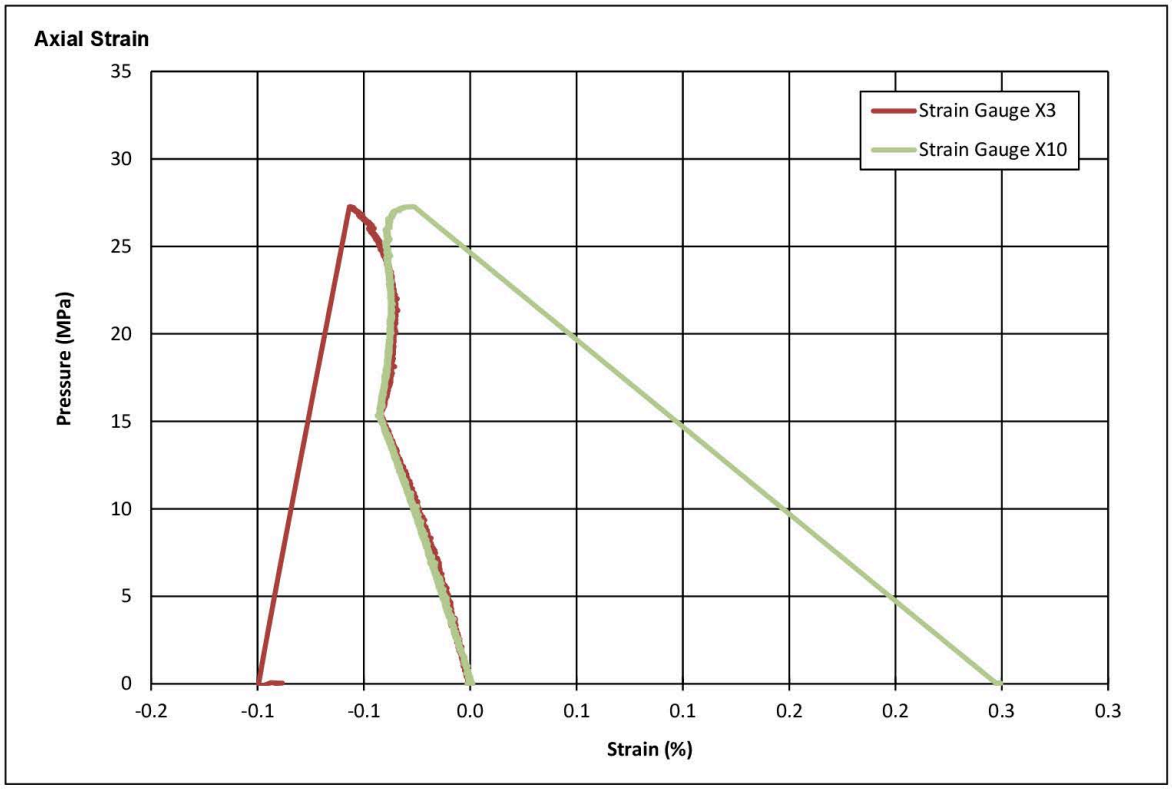

Compiled By:	Date:	Title:	C-FER Technologies
BCA	9-Dec-15	**Task 10 Corrosion Burst Test**	
Reviewed:	Date:	Specimen Identification:	Page 3 of 7
CMJT	20-Apr-17	**10.a (Corrosion Burst)**	

Pipe Measurements

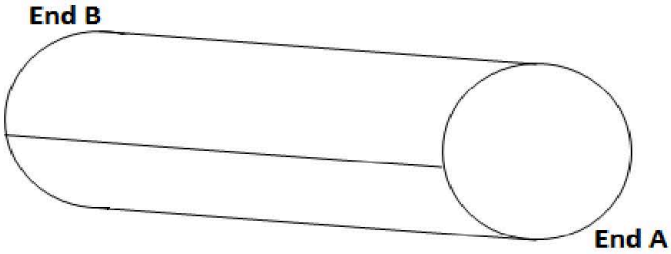

Pipe Specimen

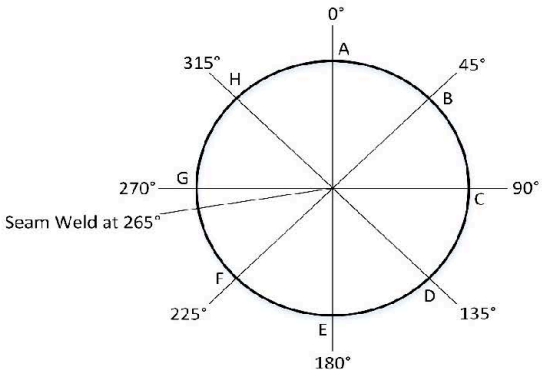

View from End A

Pre test Pup Lengths:

End A to 1	218	mm
1 to 2	328	mm
2 to 3	323	mm
3 to 4	325	mm
4 to 5	322	mm
5 to 6	325	mm
6 to 7	325	mm
7 to 8	323	mm
8 to End B	221	mm
Total Length	2 710	mm

Pre Test Pipe Lengths:

Position B	2 710	mm
Position D	2 710	mm
Position F	2 714	mm
Position H	2 711	mm
Average	2 711	mm

Circumferences:

End A measured circumference	1 022	mm
End B measured circumference	1 022	mm

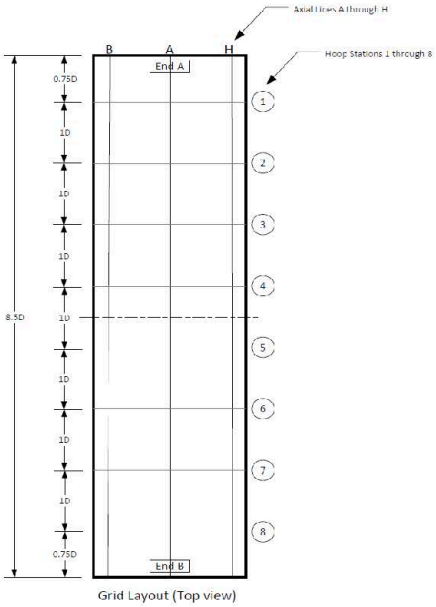

Measurement Grid

Measurements Taken By:	Date:	Title:	C-FER Technologies
TCT	20-Oct-15	**Task 10 Corrosion Burst Test**	
Measurements Approved By:	Date:	Specimen Identification:	Page 4 of 7
BCA	8-Dec-15	**10.a (Corrosion Burst)**	

Diameter Measurements

Micrometer:

Verification Rod 1	0.001	in
Verification Rod 2	0.001	in

Diameters in inches (as measured)

Station	Spanned Positions (in)			
	0° to 180°	45° to 225°	90° to 270°	135° to 315°
1	12.78	12.78	12.80	12.79
2	12.78	12.79	12.80	12.80
3	12.79	12.79	12.80	12.80
4	12.79	12.79	12.80	12.80
5	12.78	12.80	12.80	12.80
6	12.78	12.78	12.80	12.80
7	12.79	12.79	12.81	12.81
8	12.79	12.79	12.80	12.80

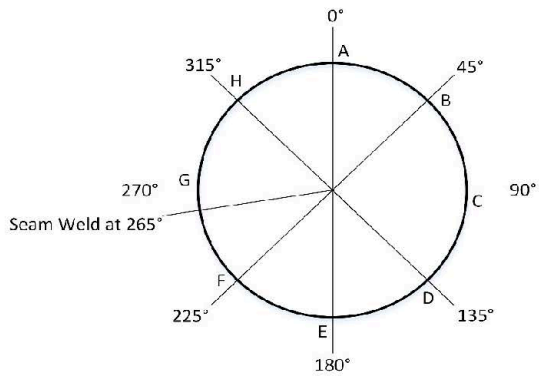

View from End A

Diameters in millimeters (converted)

Station	Spanned Positions (mm)			
	0° to 180°	45° to 225°	90° to 270°	135° to 315°
1	324.51	324.69	325.07	324.87
2	324.66	324.84	325.20	325.09
3	324.89	324.92	325.12	325.17
4	324.82	324.82	325.09	325.07
5	324.71	324.99	325.15	325.02
6	324.61	324.69	325.02	325.02
7	324.89	324.97	325.30	325.30
8	324.92	324.89	325.07	325.20

Station	Max. OD (mm)	@ Position	Min. OD (mm)	@ Position	Average OD (mm)	Standard Deviation (mm)	Ovality* (%)	Ovality incl. angle (°)
1	325.07	90	324.51	0	324.78	0.24	0.17	90
2	325.20	90	324.66	0	324.95	0.24	0.16	90
3	325.17	135	324.89	0	325.02	0.14	0.09	135
4	325.09	90	324.82	0	324.95	0.15	0.09	90
5	325.15	90	324.71	0	324.97	0.18	0.13	90
6	325.02	90	324.61	0	324.83	0.21	0.13	90
7	325.30	90	324.89	0	325.11	0.21	0.13	90
8	325.20	135	324.89	45	325.02	0.14	0.09	90

$$^{*}\ Ovality = \frac{(D_{max} - D_{min})}{(D_{nom})} * 100\%$$

Measurements Taken By:	Date:	Title:	C-FER Technologies
TCT	20-Oct-15	**Task 10 Corrosion Burst Test**	
Measurements Approved By:	Date:	Specimen Identification:	Page 5 of 7
BCA	8-Dec-15	**10.a (Corrosion Burst)**	

Wall Thickness Measurements

Micrometer Measurements
Pipe Ring Verification

	Micrometer (mm)	Ultrasonic probe (mm)
End A - Position B	7.050	7.05
End A - Position D	7.100	7.10
End A - Position F	7.030	7.03
End A - Position H	7.030	7.03
End B - Position B	7.130	7.13
End B - Position D	7.090	7.09
End B - Position F	7.060	7.06
End B - Position H	7.000	7.00

Micrometer ID:

Mitutoyo 0-1" (HTS)
1" : 1.00025"

Ultrasonic Probe ID:
Dakota Ultrasonics MVX
Velocity: 5903 m/s (Cal pt: 7.05in)

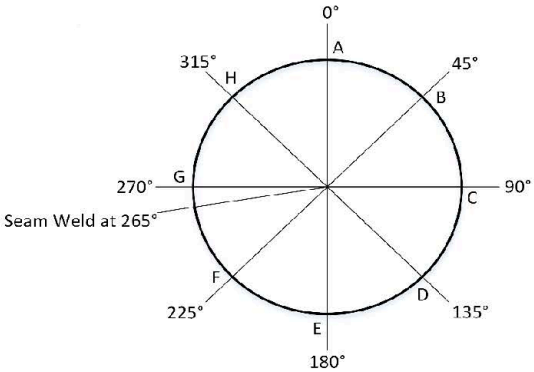

View from End A

Ultrasonic Measurements

Station	Circumferential Position							
	A	B	C	D	E	F	G	H
	Wall Thickness (mm)							
1	7.180	7.190	7.220	7.190	7.130	7.110	7.340	7.100
2	7.200	7.250	7.260	7.230	7.180	7.150	7.200	7.190
3	7.180	7.220	7.260	7.200	7.170	7.150	7.210	7.170
4	7.110	7.170	7.210	7.190	7.100	7.100	7.180	7.110
5	7.150	7.170	7.180	7.170	7.100	7.070	7.090	7.110
6	7.100	7.170	7.180	7.170	7.100	7.090	7.080	7.090
7	7.120	7.130	7.190	7.150	7.090	7.080	7.040	7.100
8	7.070	7.120	7.160	7.110	7.050	7.040	6.990	7.040

Average	7.15 mm
Std. dev	0.06 mm

Measurements Taken By:	Date:	Title:	C-FER Technologies
TCT	20-Oct-15	**Task 10 Corrosion Burst Test**	
Measurements Approved By:	Date:	Specimen Identification:	Page 6 of 7
BCA	8-Dec-15	**10.a (Corrosion Burst)**	

Instrumentation Layout

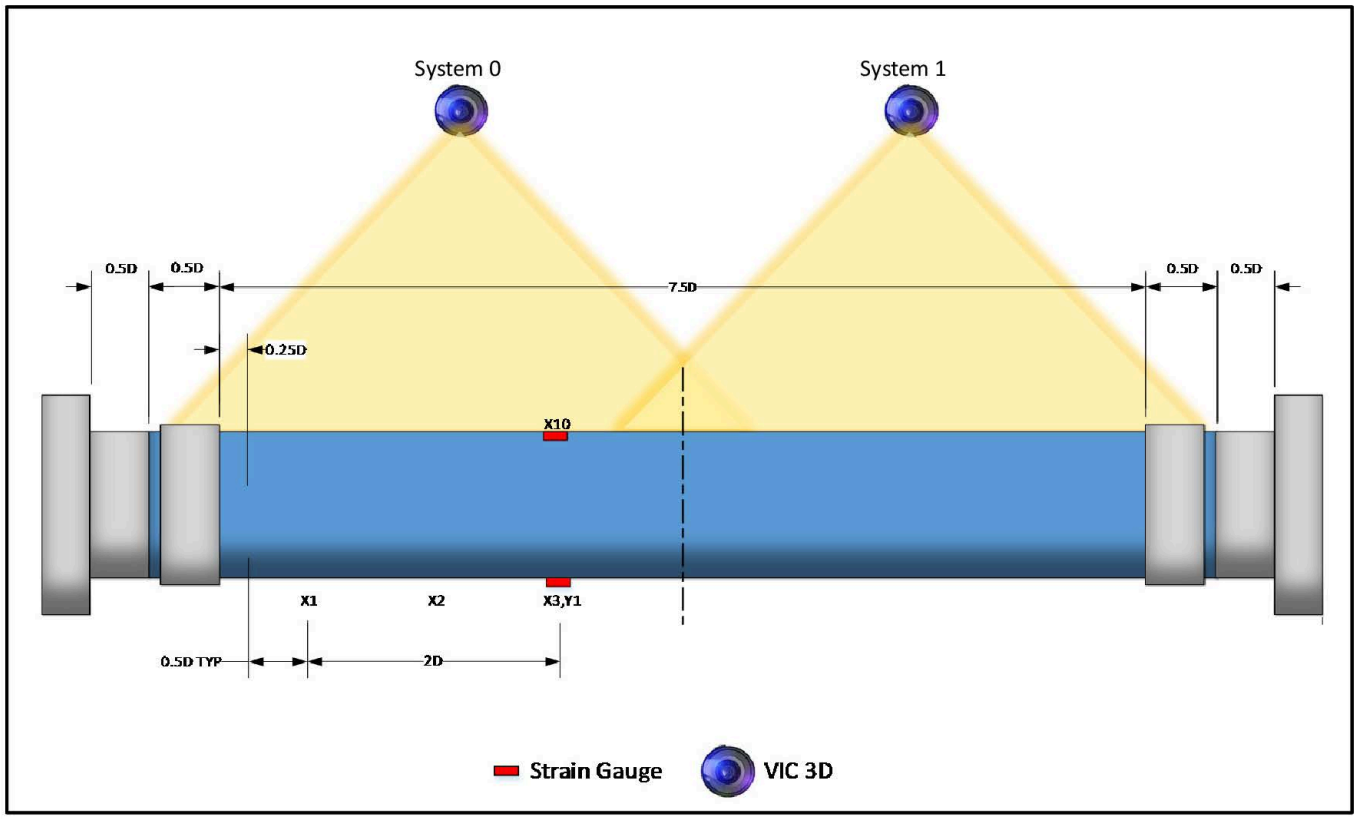

Drawing Done By:	Date:	Title:	C-FER Technologies
BCA	4-Feb-16	**Task 10 Corrosion Burst Test**	
Drawing Approved By:	Date:	Specimen Identification:	Page 7 of 7
CMJT	10-Apr-17	**10.a (Corrosion Burst)**	

Task 10 Bend and Burst Test

Specimen Identification: **10.b** (Corrosion Bend & Burst 1)
C-FER Specimen Number: **X70-ERW-3-10b**

C-FER Test Summary: **Rev. 2, June 23, 2017**
Test Date: **March 24, 2016**

Nominal Pipe Characteristics

Nominal OD (mm) =	323.85
Average OD (mm) =	324.97
Nominal Wall Thickness (mm) =	7.14
Average Wall Thickness (mm) =	7.12
Specimen Length (mm) =	2704
Length/OD =	8.3
SMYS (MPa) =	483

Test Loading Steps

1. The specimen was pressurized to 72% SMYS while applying compressive force to compensate for the end cap load.
2. The specimen was bent to a target 2D strain of -2.3%.
3. The specimen pressure was increased until the pipe burst.

Test Parameters

Target Net Pressure (MPa) =	15.32
Test Average Net Pressure (MPa) =	15.32

Test Results

Peak End Moment (kN-m) =	262
Peak Local Moment* (kN-m) =	350
Burst Pressure (MPa) =	25.9

Strains Across Buckle After Step 2

1D Strain - Discrete Instrumentation (%) =	-3.2
1D Strain - VIC (%) =	-3.8
2D Strain - VIC (%) =	-2.4

Anomaly - Corrosion Axial Groove

	Length	Width	Depth
Nominal Dimensions	0.2D	0.05D	0.4t
Nominal Dimensions (in)	64.77	16.19	2.85
Measured Dimensions (in)	66.0	16.0	2.72

Failure Mode

Pipe burst in corrosion feature.

*Local Moment taken at specimen midpoint

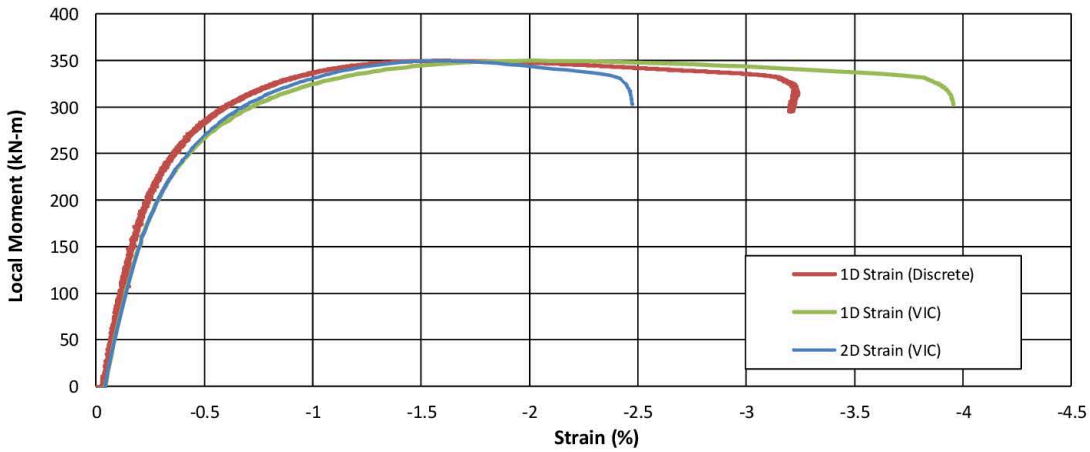

General Comments:

Post Test:

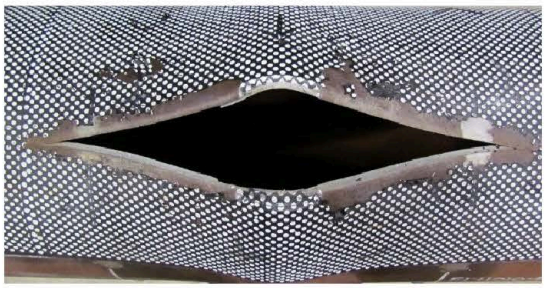

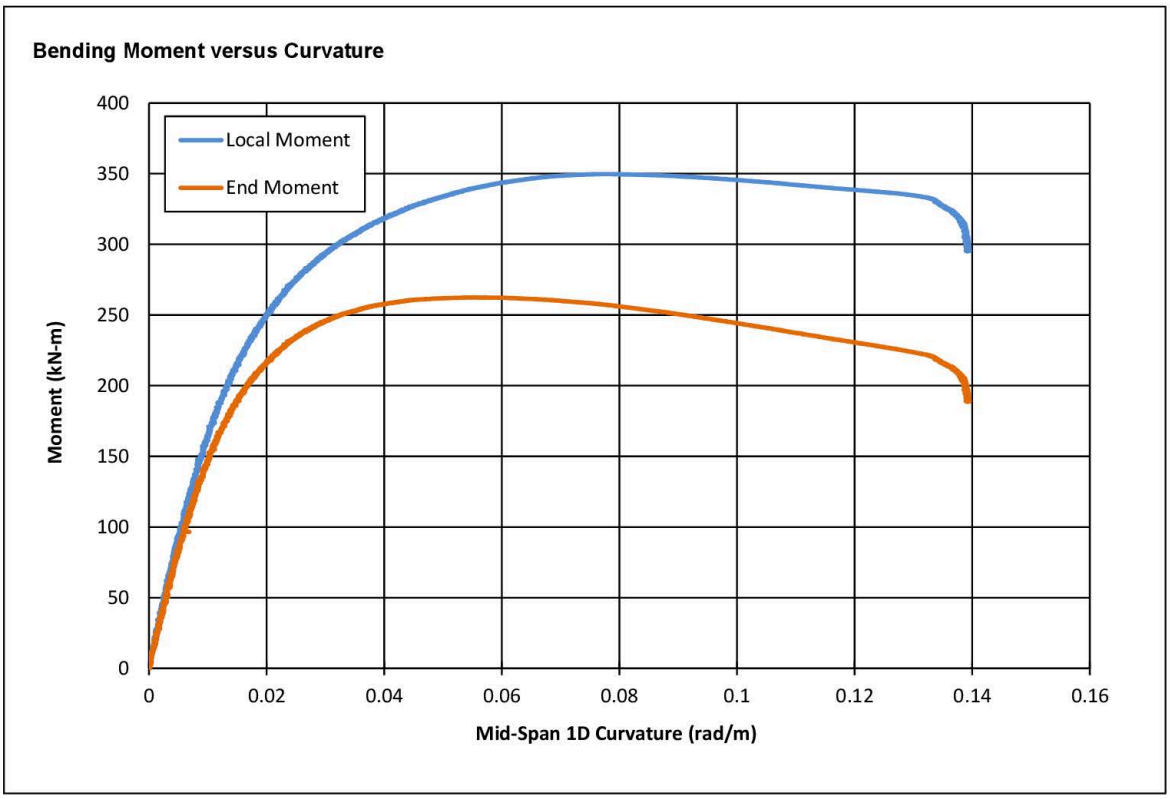

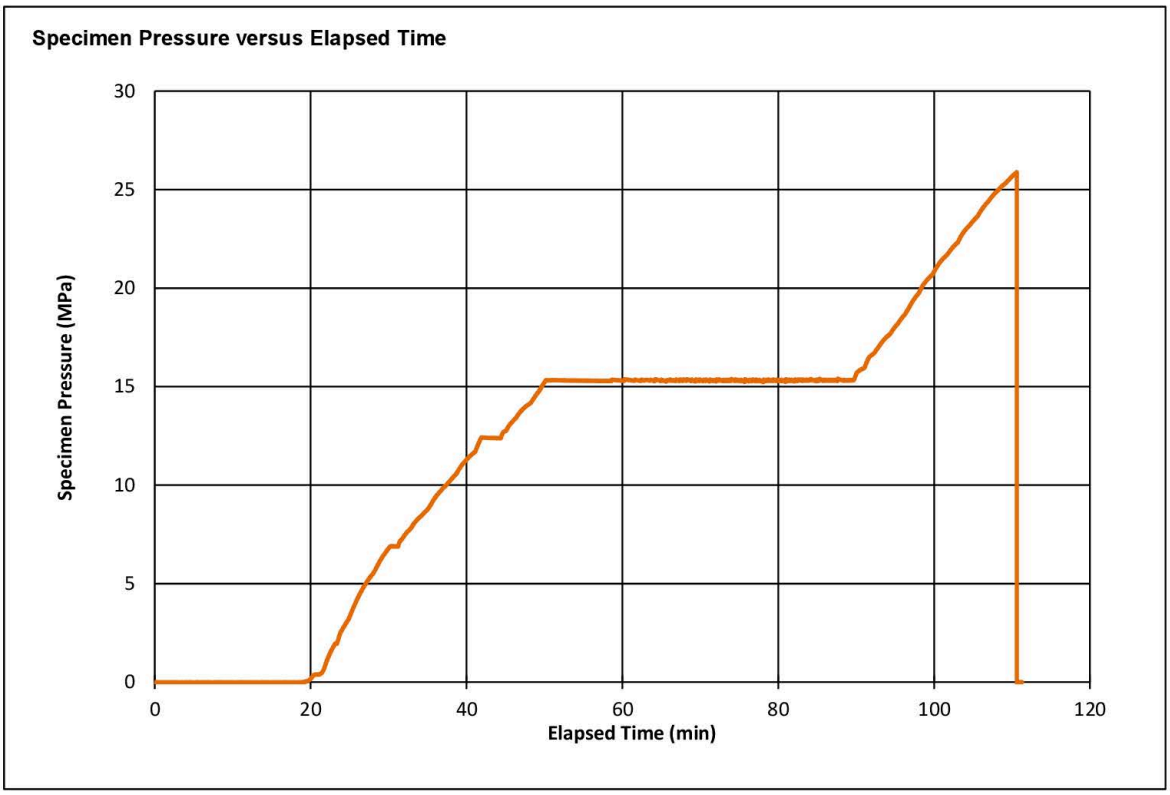

Compiled By:	Date:	Title:	C-FER Technologies
BCA	25-Aug-15	**Task 10 Bend and Burst Test**	
Reviewed:	Date:	Specimen Identification:	Page 2 of 8
CMJT	18-Apr-17	**10.b (Corrosion Bend & Burst 1)**	

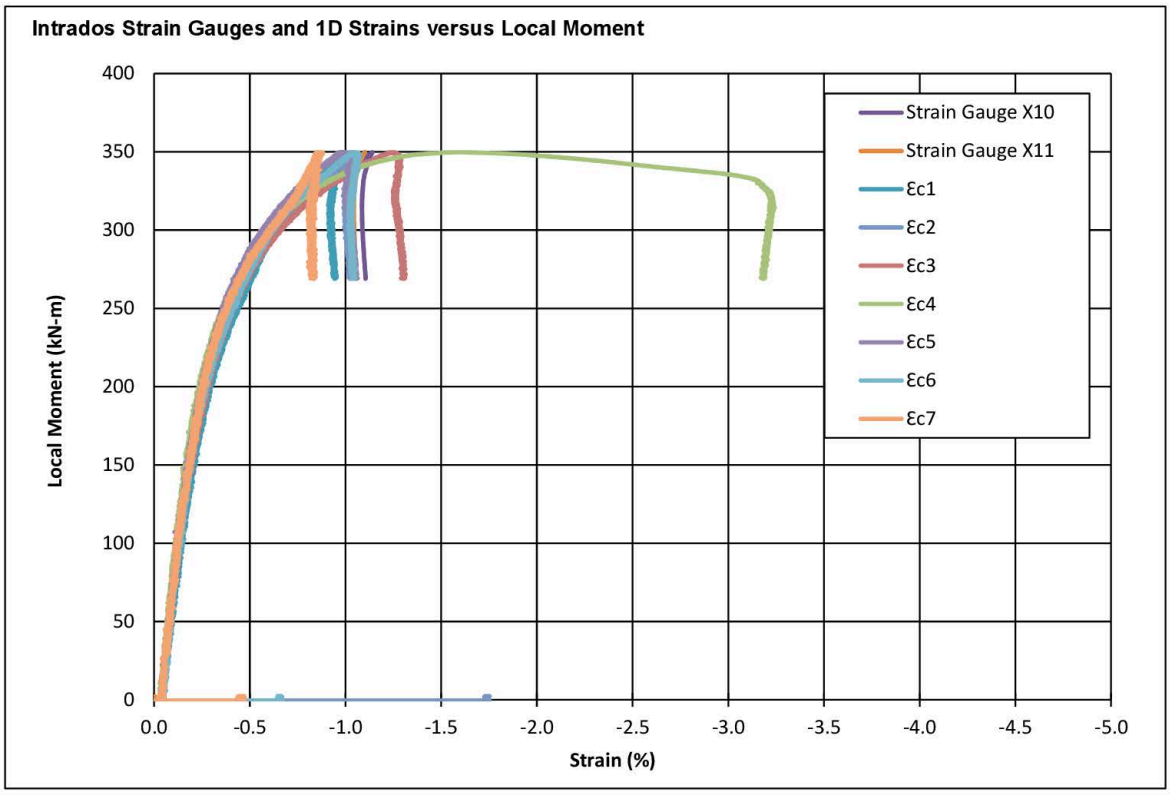

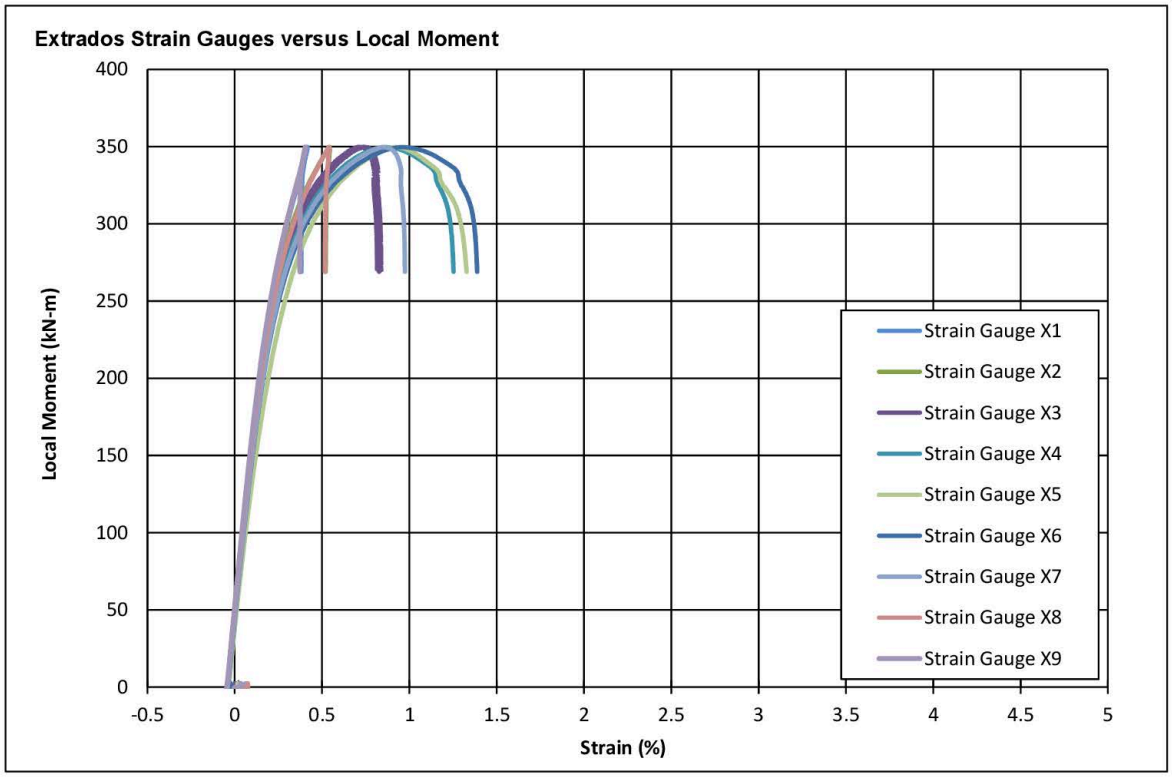

Compiled By:	Date:	Title:	C-FER Technologies
BCA	25-Aug-15	**Task 10 Bend and Burst Test**	
Reviewed:	Date:	Specimen Identification:	Page 3 of 8
CMJT	18-Apr-17	**10.b (Corrosion Bend & Burst 1)**	

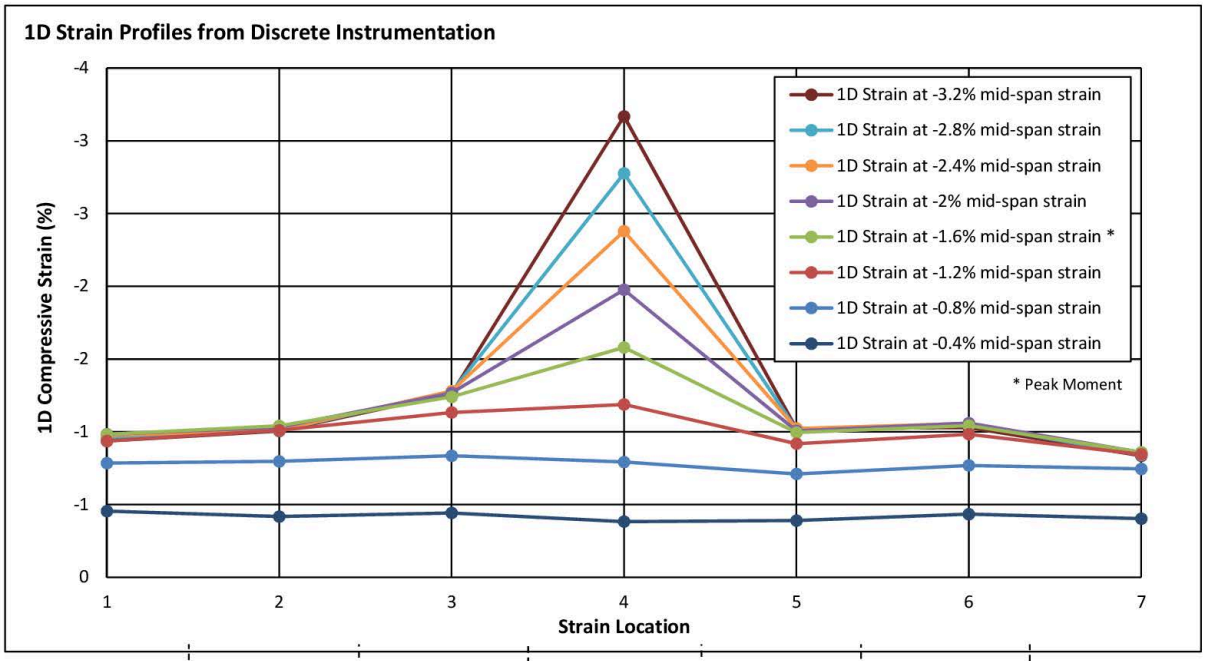

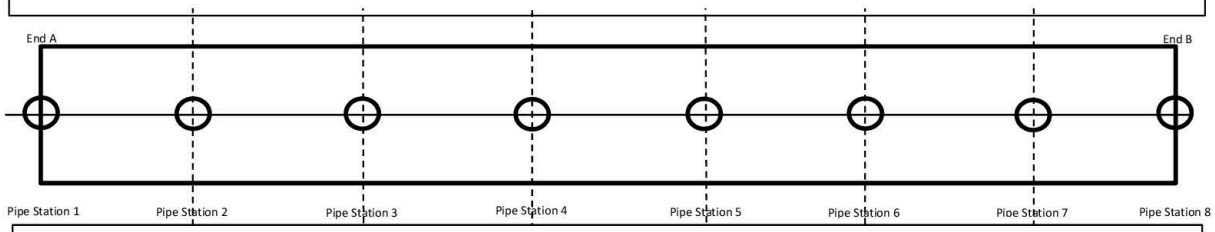

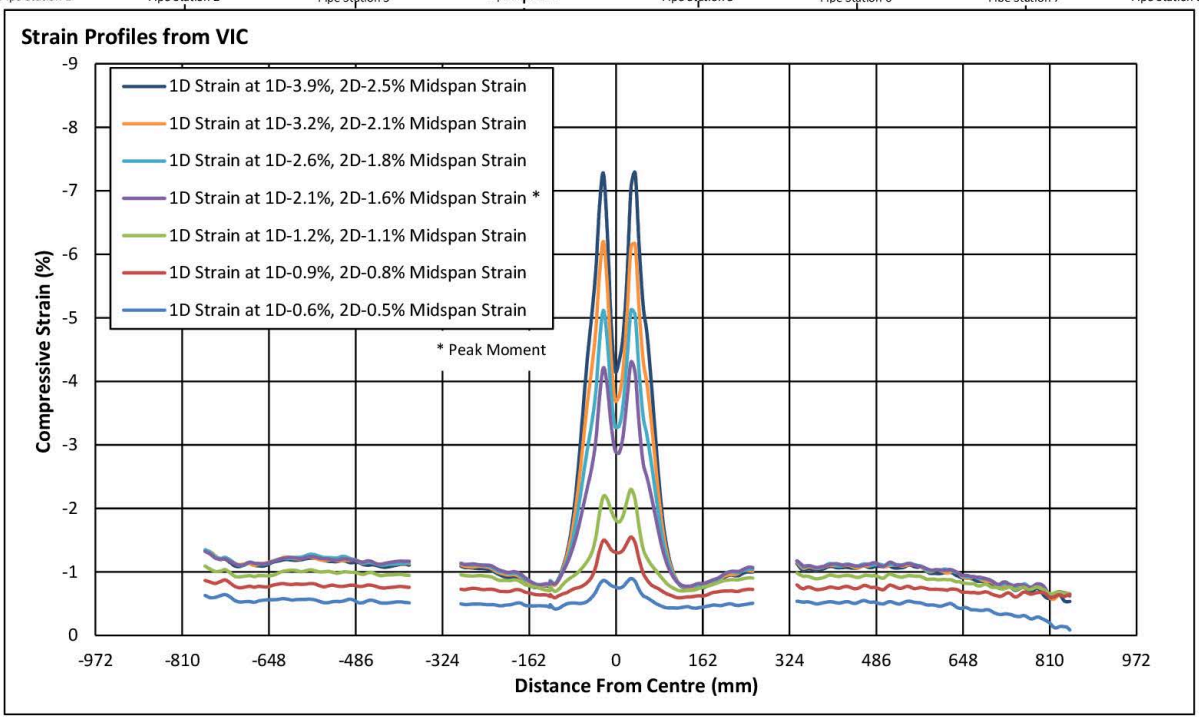

Compiled By:	Date:	Title:	C-FER Technologies
BCA	4-Feb-16	**Task 10 Bend and Burst Test**	
Reviewed:	Date:	Specimen Identification:	Page 4 of 8
CMJT	18-Apr-17	**10.b (Corrosion Bend & Burst 1)**	

Pipe Measurements

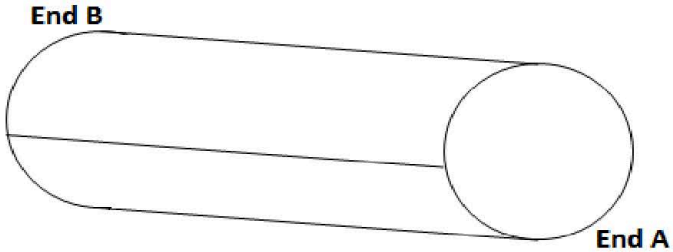

Pipe Specimen

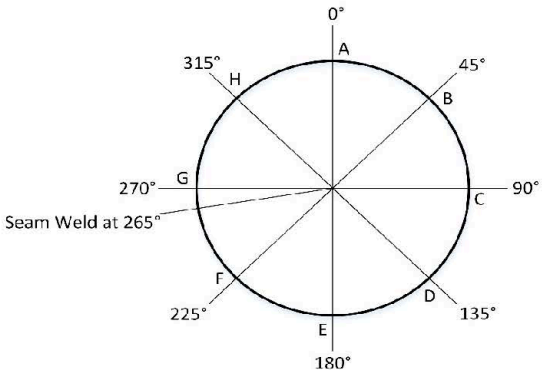

View from End A

Pre test Pup Lengths:

End A to 1	219	mm
1 to 2	324	mm
2 to 3	324	mm
3 to 4	323	mm
4 to 5	325	mm
5 to 6	324	mm
6 to 7	323	mm
7 to 8	323	mm
8 to End B	218	mm
Total Length	2 703	mm

Pre Test Pipe Lengths:

Position B	2 703	mm
Position D	2 705	mm
Position F	2 706	mm
Position H	2 701	mm
Average	2 704	mm

Circumferences:

End A measured circumference	1 023	mm
End B measured circumference	1 023	mm

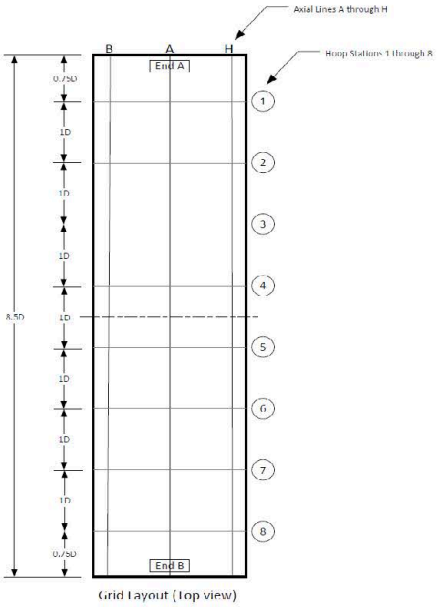

Measurement Grid

Measurements Taken By:	Date:	Title:	C-FER Technologies
TCT	8-Dec-15	**Task 10 Bend and Burst Test**	
Measurements Approved By:	Date:	Specimen Identification:	Page 5 of 8
BCA	16-Dec-15	**10.b (Corrosion Bend & Burst 1)**	

Diameter Measurements

Micrometer:

Verification Rod 1	0.000	in
Verification Rod 2	0.000	in

Diameters in inches (as measured)

Station	Spanned Positions (in)			
	0° to 180°	45° to 225°	90° to 270°	135° to 315°
1	12.782	12.794	12.803	12.802
2	12.788	12.785	12.802	12.802
3	12.787	12.790	12.804	12.803
4	12.794	12.785	12.800	12.802
5	12.788	12.788	12.802	12.806
6	12.783	12.783	12.796	12.798
7	12.788	12.785	12.801	12.796
8	12.781	12.789	12.805	12.800

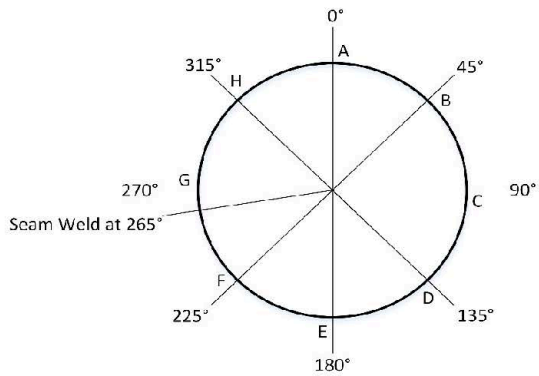

View from End A

Diameters in millimeters (converted)

Station	Spanned Positions (mm)			
	0° to 180°	45° to 225°	90° to 270°	135° to 315°
1	324.66	324.97	325.20	325.17
2	324.82	324.74	325.17	325.17
3	324.79	324.87	325.22	325.20
4	324.97	324.74	325.12	325.17
5	324.82	324.82	325.17	325.27
6	324.69	324.69	325.02	325.07
7	324.82	324.74	325.15	325.02
8	324.64	324.84	325.25	325.12

Station	Max. OD (mm)	@ Position	Min. OD (mm)	@ Position	Average OD (mm)	Standard Deviation (mm)	Ovality* (%)	Ovality incl. angle (°)
1	325.20	90	324.66	0	325.00	0.25	0.16	90
2	325.17	90	324.74	45	324.97	0.23	0.13	45
3	325.22	90	324.79	0	325.02	0.22	0.13	90
4	325.17	135	324.74	45	325.00	0.19	0.13	90
5	325.27	135	324.82	0	325.02	0.24	0.14	135
6	325.07	135	324.69	0	324.87	0.21	0.12	135
7	325.15	90	324.74	45	324.93	0.19	0.13	45
8	325.25	90	324.64	0	324.96	0.27	0.19	90

$$^{*}\ Ovality = \frac{(D_{max} - D_{min})}{(D_{nom})} * 100\%$$

Measurements Taken By:	Date:	Title:	C-FER Technologies
TUT	22-Oct-15	**Task 10 Bend and Burst Test**	
Measurements Approved By:	Date:	Specimen Identification:	Page 6 of 8
JHB	16-Dec-15	**10.b (Corrosion Bend & Burst 1)**	

Wall Thickness Measurements

Micrometer Measurements
Pipe Ring Verification

	Micrometer (mm)	Ultrasonic probe (mm)
End A - Position B	7.106	7.11
End A - Position D	7.106	7.08
End A - Position F	7.036	7.02
End A - Position H	7.050	7.02
End B - Position B	7.137	7.11
End B - Position D	7.152	7.17
End B - Position F	7.070	7.05
End B - Position H	7.086	7.08

Micrometer ID:

Mitutoyo 0-1" (HTS)
1": 1.00000"

Ultrasonic Probe ID:
Dakota MVX
Velocity 5914 m/s

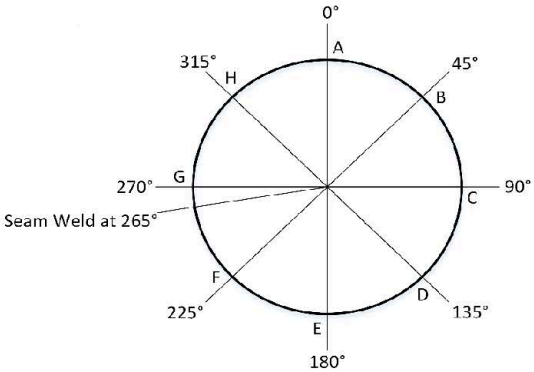

View from End A

Ultrasonic Measurements

Station	Circumferential Position							
	A	B	C	D	E	F	G	H
	Wall Thickness (mm)							
1	7.030	7.060	7.080	7.050	6.990	6.980	7.200	7.000
2	7.100	7.080	7.160	7.060	7.070	7.000	7.380	7.000
3	7.060	7.100	7.140	7.120	7.090	7.030	7.330	7.060
4	7.110	7.140	7.200	7.140	7.130	7.130	7.330	7.130
5	7.130	7.150	7.190	7.190	7.100	7.110	7.420	7.070
6	7.100	7.180	7.180	7.100	7.130	7.000	7.410	7.150
7	7.000	7.130	7.200	7.110	7.090	7.040	7.440	7.040
8	7.070	7.090	7.100	7.130	7.110	7.030	7.290	7.010

Average	7.12 mm
Std. dev	0.11 mm

Measurements Taken By:	Date:	Title:	C-FER Technologies
TCT	26-Oct-15	**Task 10 Bend and Burst Test**	
Measurements Approved By:	Date:	Specimen Identification:	Page 7 of 8
BCA	16-Dec-15	**10.b (Corrosion Bend & Burst 1)**	

Instrumentation Layout

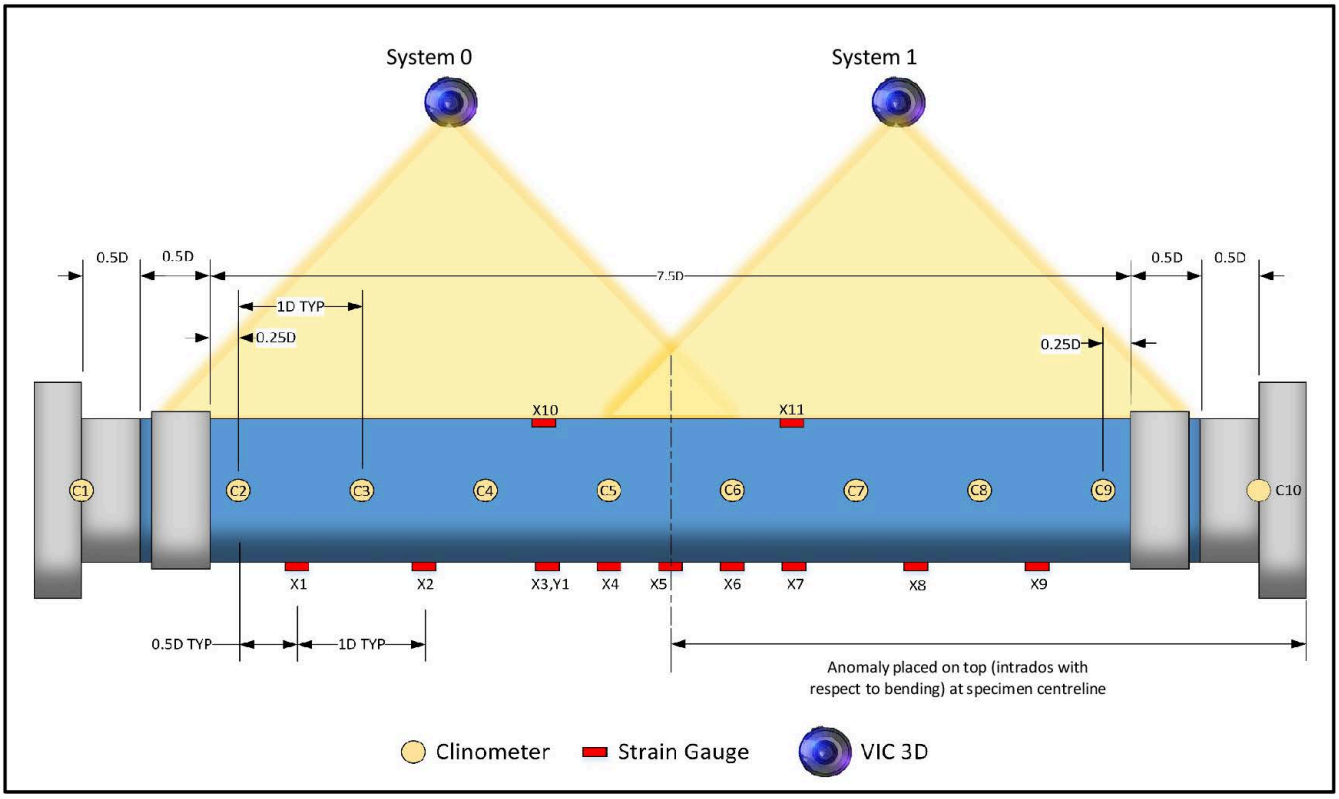

Drawing Done By:	Date:	Title:	C-FER Technologies
BCA	4-Feb-16	**Task 10 Bend and Burst Test**	
Drawing Approved By:	Date:	Specimen Identification:	Page 8 of 8
CMJT	6-Apr-17	**10.b (Corrosion Bend & Burst 1)**	

Task 10 Bend and Burst Test

CRES Specimen Identification: **10.c** (Corrosion Bend & Burst 2)
C-FER Specimen Number: **X70-ERW-3-10c**

C-FER Test Summary: **Rev. 2, June 23, 2017**
Test Date: **March 24, 2016**

Nominal Pipe Characteristics

Nominal OD (mm) =	323.85
Average OD (mm) =	324.94
Nominal Wall Thickness (mm) =	7.14
Average Wall Thickness (mm) =	7.11
Specimen Length (mm) =	2701
Length/OD =	8.3
SMYS (MPa) =	483

Test Loading Steps

1. The specimen was pressurized to 72% SMYS while applying compressive force to compensate for the end cap load.
2. The specimen was bend to a target 2D Strain of -2.3%
3. The specimen pressure was increased until burst.

Test Parameters

Target Net Pressure (MPa) =	15.32
Test Average Net Pressure (MPa) =	15.31

Test Results

Peak End Moment (kN-m) =	243
Peak Local Moment* (kN-m) =	306
Burst Pressure (MPa) =	27.4

Strains Across Buckle After Step 2

1D Strain - Discrete Instrumentation (%) =	-3.7
1D Strain - VIC (%) =	-4.4
2D Strain - VIC (%) =	-2.4

Anomaly - Deep Corrosion Patch

	Length	Width	Depth
Nominal Dimensions	0.2D	0.2D	0.4t
Nominal Dimensions (in)	64.77	64.77	2.85
Measured Dimensions (in)	65.0	65.0	2.62

Failure Mode

Pipe burst in corrosion feature.

*Local Moment taken at specimen midpoint

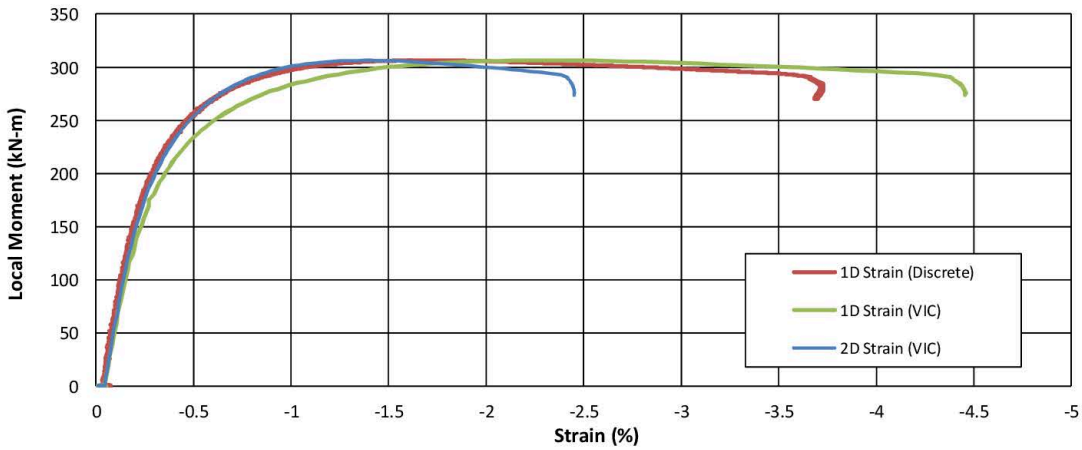

General Comments:

Post Test:

		Title: **Task 10 Bend and Burst Test**	C-FER Technologies
Reviewed: CMJT	Date: 23-Jun-17	Specimen Identification: **10.c (Corrosion Bend & Burst 2)**	Page 1 of 8

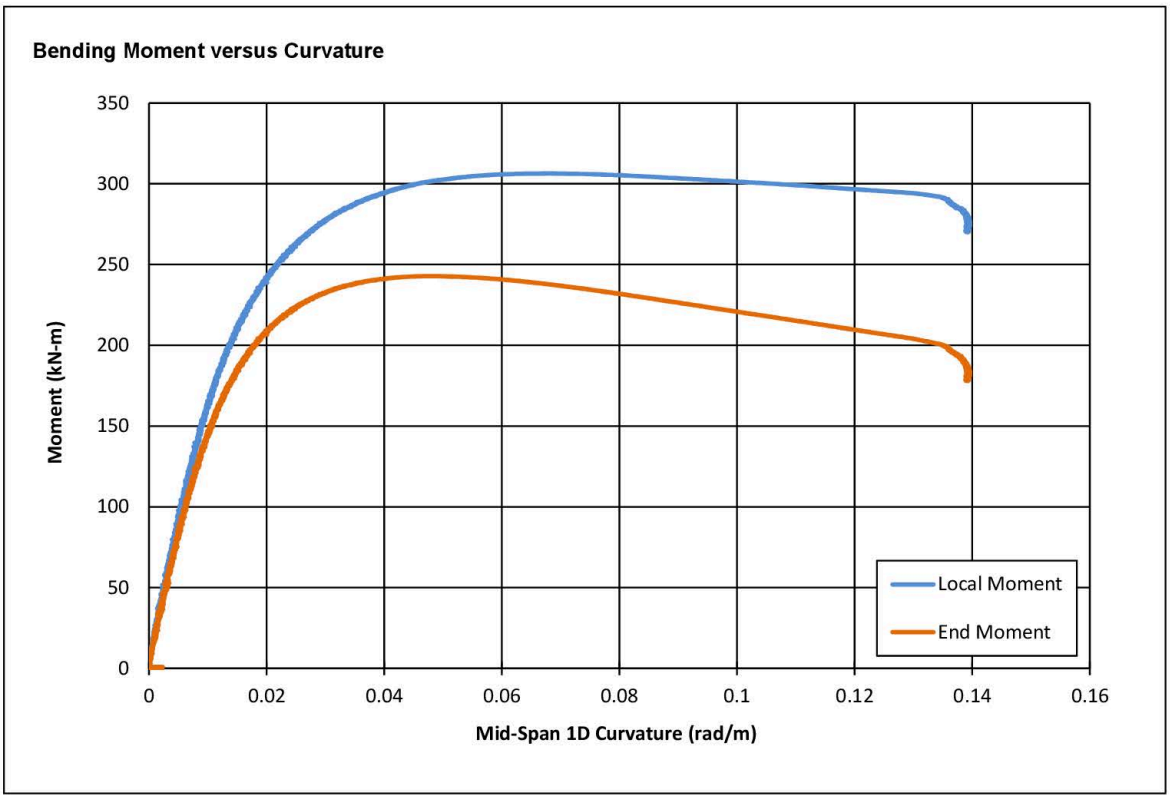

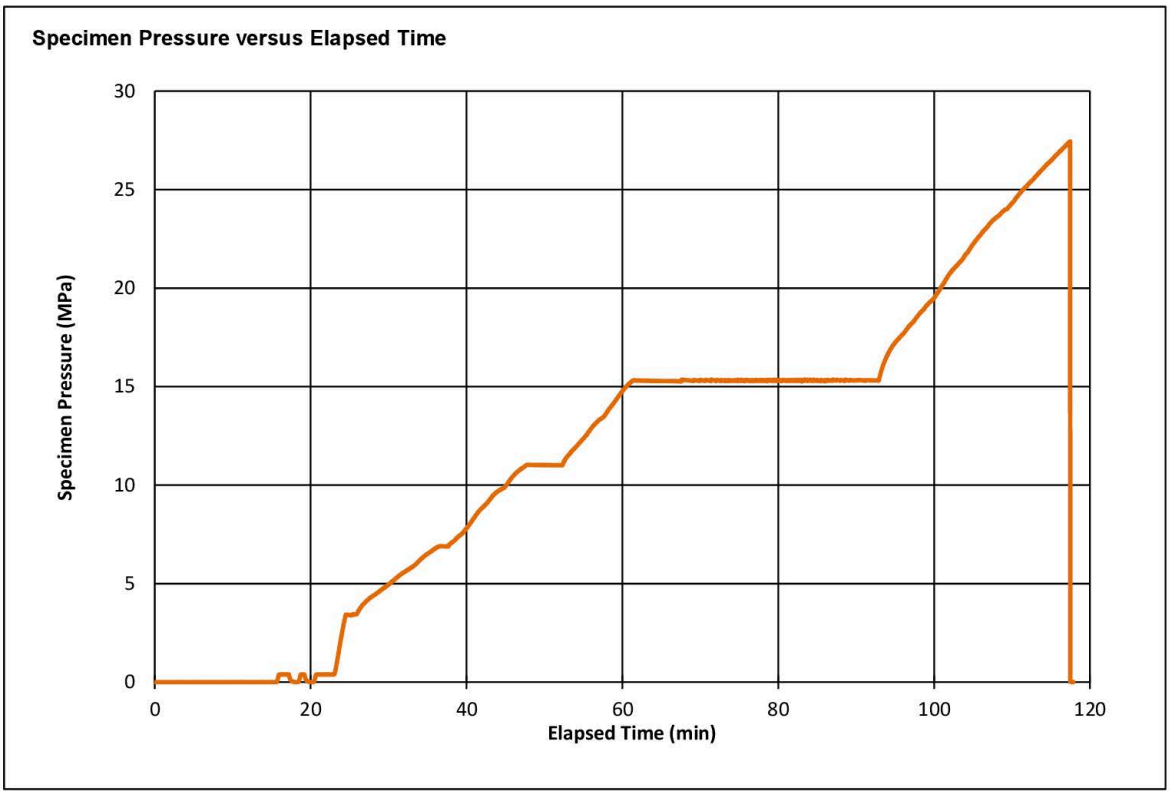

Compiled By:	Date:	Title:	C-FER Technologies
BCA	25-Aug-15	**Task 10 Bend and Burst Test**	
Reviewed:	Date:	Specimen Identification:	Page 2 of 8
CMJT	18-Apr-17	**10.c (Corrosion Bend & Burst 2)**	

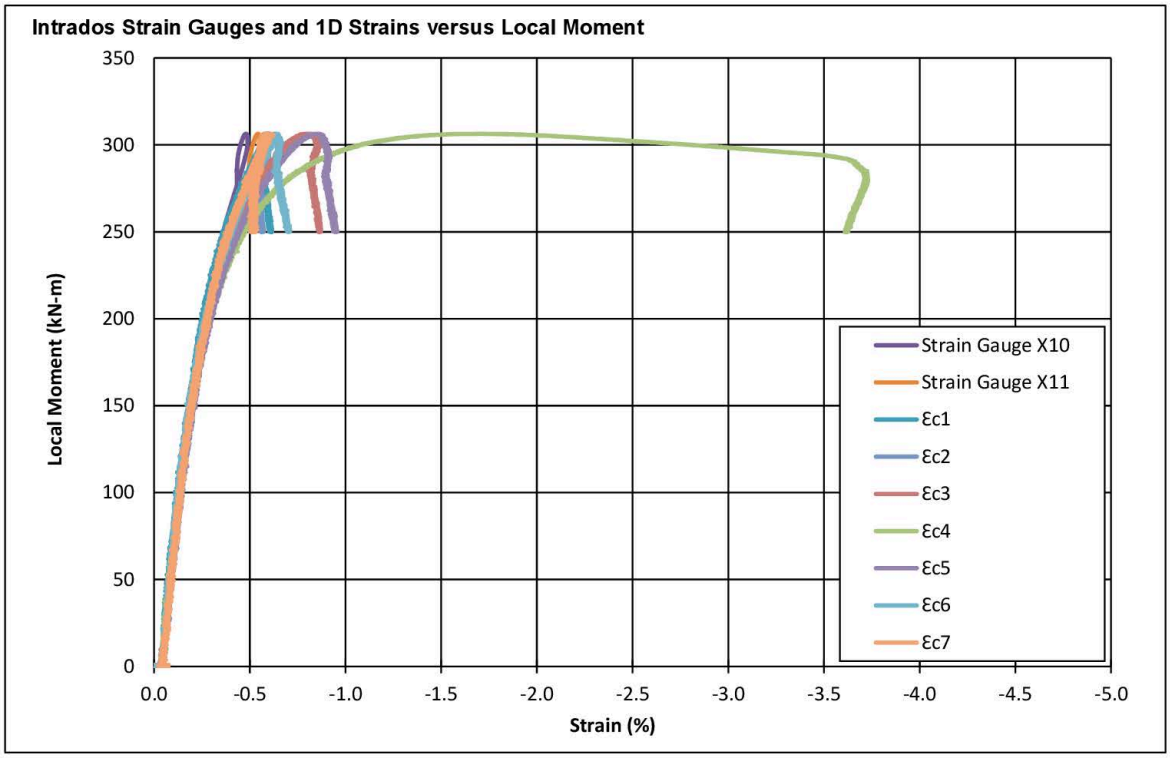

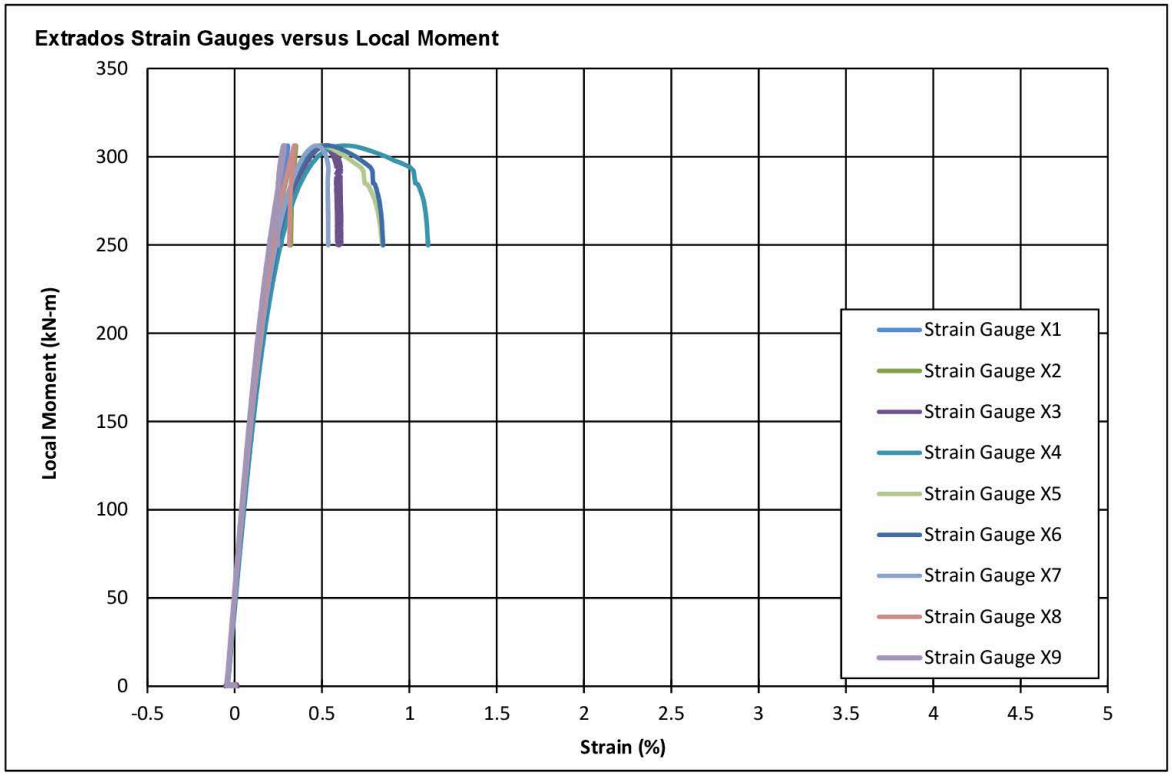

Compiled By:	Date:	Title:	C-FER Technologies
BCA	25-Aug-15	**Task 10 Bend and Burst Test**	
Reviewed:	Date:	Specimen Identification:	Page 3 of 8
CMJT	18-Apr-17	**10.c (Corrosion Bend & Burst 2)**	

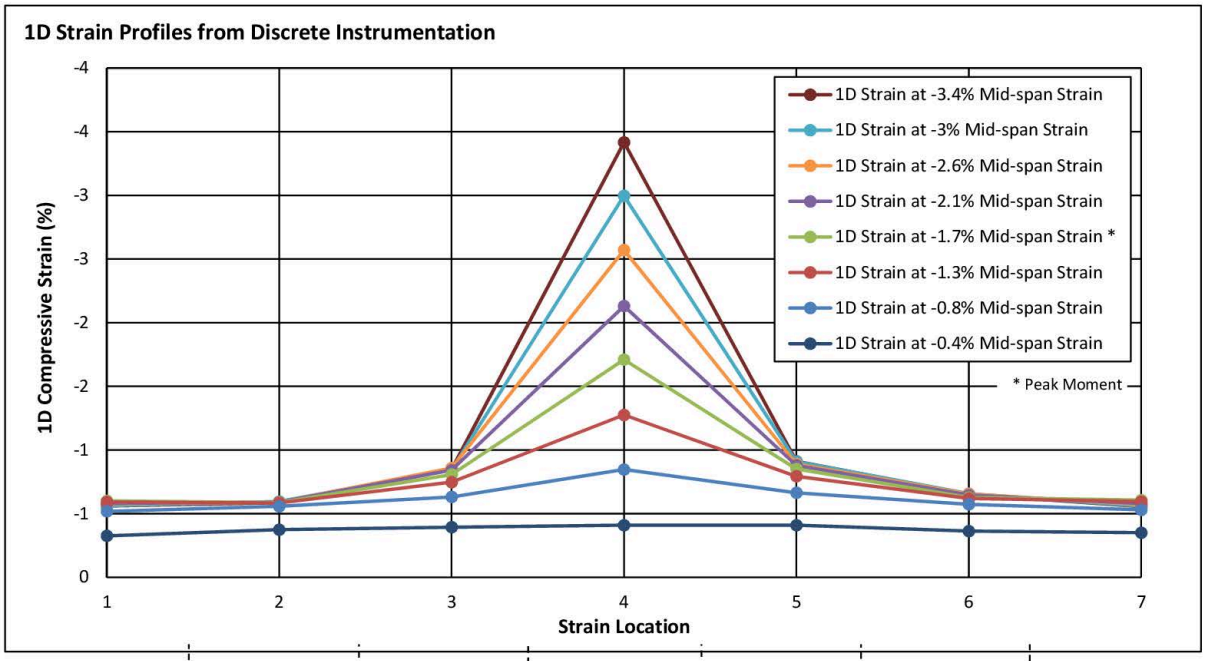

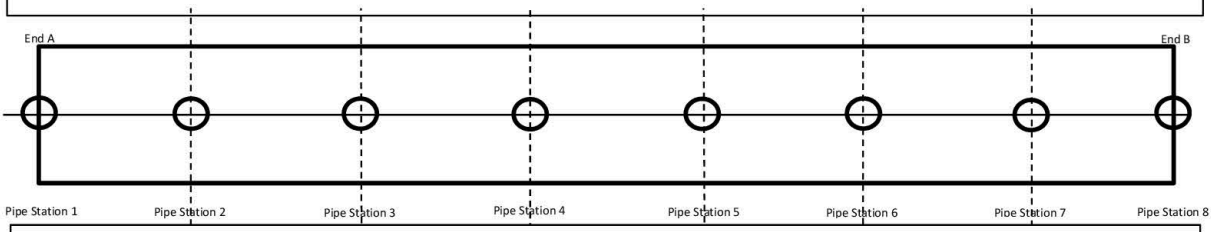

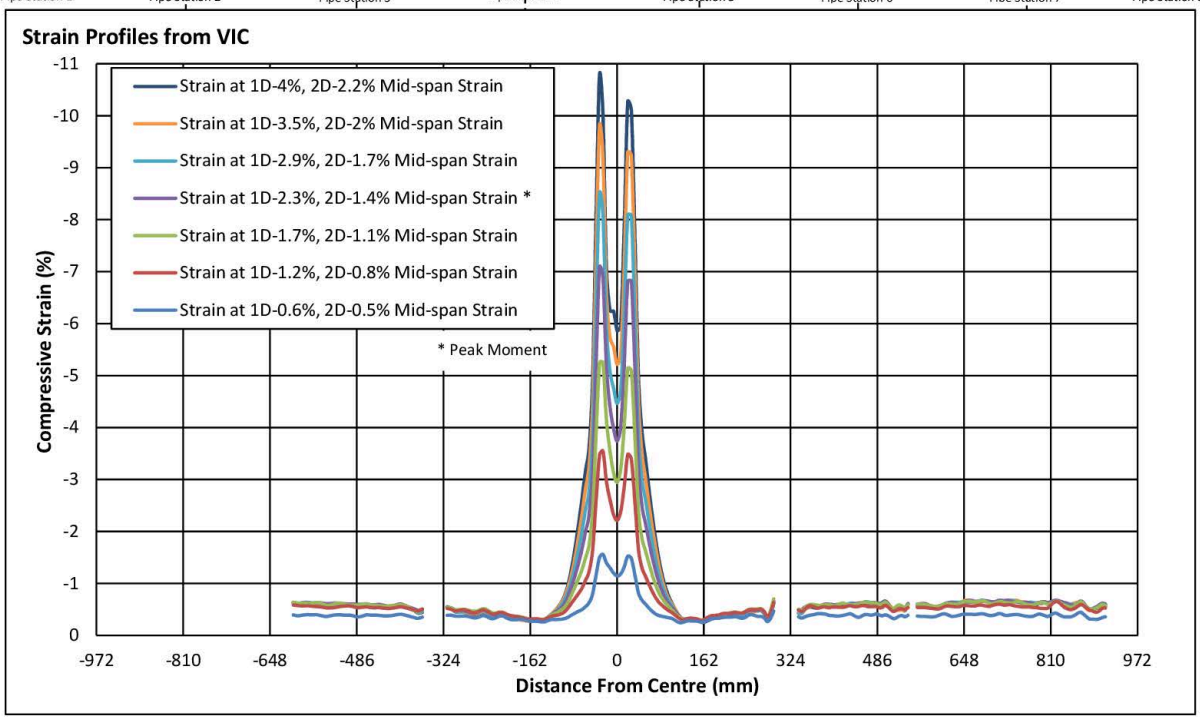

Compiled By:	Date:	Title:	C-FER Technologies
BCA	4-Feb-16	**Task 10 Bend and Burst Test**	
Reviewed:	Date:	Specimen Identification:	Page 4 of 8
CMJT	18-Apr-17	**10.c (Corrosion Bend & Burst 2)**	

Pipe Measurements

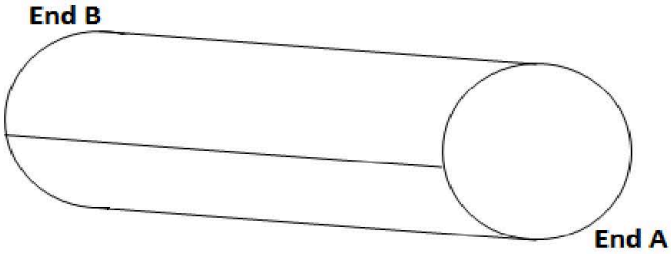

Pipe Specimen

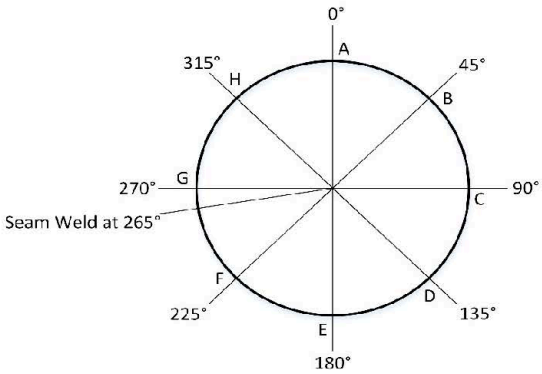

View from End A

Pre test Pup Lengths:

End A to 1	221	mm
1 to 2	326	mm
2 to 3	321	mm
3 to 4	323	mm
4 to 5	324	mm
5 to 6	324	mm
6 to 7	325	mm
7 to 8	324	mm
8 to End B	214	mm
Total Length	2 702	mm

Pre Test Pipe Lengths:

Position B	2 702	mm
Position D	2 702	mm
Position F	2 700	mm
Position H	2 700	mm
Average	2 701	mm

Circumferences:

End A measured circumference	1 022	mm
End B measured circumference	1 022	mm

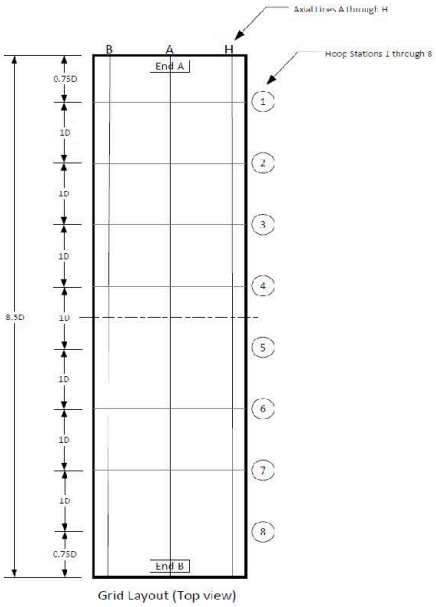

Measurement Grid

Measurements Taken By:	Date:	Title:	C-FER Technologies
TCT	15-Dec-15	**Task 10 Bend and Burst Test**	
Measurements Approved By:	Date:	Specimen Identification:	Page 5 of 8
BCA	15-Dec-15	**10.c (Corrosion Bend & Burst 2)**	

Diameter Measurements

Micrometer:

Verification Rod 1	0.000	in
Verification Rod 2	0.000	in

Diameters in inches (as measured)

Station	Spanned Positions (in)			
	0° to 180°	45° to 225°	90° to 270°	135° to 315°
1	12.787	12.796	12.805	12.803
2	12.778	12.783	12.794	12.792
3	12.787	12.789	12.799	12.799
4	12.787	12.788	12.796	12.802
5	12.780	12.789	12.803	12.798
6	12.777	12.785	12.789	12.804
7	12.780	12.785	12.800	12.800
8	12.790	12.792	12.808	12.809

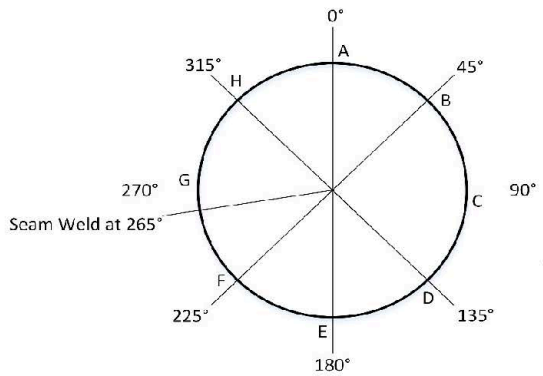

View from End A

Diameters in millimeters (converted)

Station	Spanned Positions (mm)			
	0° to 180°	45° to 225°	90° to 270°	135° to 315°
1	324.79	325.02	325.25	325.20
2	324.56	324.69	324.97	324.92
3	324.79	324.84	325.09	325.09
4	324.79	324.82	325.02	325.17
5	324.61	324.84	325.20	325.07
6	324.54	324.74	324.84	325.22
7	324.61	324.74	325.12	325.12
8	324.87	324.92	325.32	325.35

Station	Max. OD (mm)	@ Position	Min. OD (mm)	@ Position	Average OD (mm)	Standard Deviation (mm)	Ovality* (%)	Ovality incl. angle (°)
1	325.25	90	324.79	0	325.06	0.21	0.14	90
2	324.97	90	324.56	0	324.78	0.19	0.13	90
3	325.09	90	324.79	0	324.95	0.16	0.09	90
4	325.17	135	324.79	0	324.95	0.18	0.12	135
5	325.20	90	324.61	0	324.93	0.26	0.18	90
6	325.22	135	324.54	0	324.83	0.29	0.21	135
7	325.12	90	324.61	0	324.90	0.26	0.16	90
8	325.35	135	324.87	0	325.11	0.26	0.15	135

$$^{*}\ Ovality = \frac{(D_{\max} - D_{\min})}{(D_{nom})} * 100\%$$

Measurements Taken By:	Date:	Title:	C-FER Technologies
TCT	22-Oct-15	**Task 10 Bend and Burst Test**	
Measurements Approved By:	Date:	Specimen Identification:	Page 6 of 8
BCA	15-Dec-15	**10.c (Corrosion Bend & Burst 2)**	

Wall Thickness Measurements

Micrometer Measurements
Pipe Ring Verification

	Micrometer (mm)	Ultrasonic probe (mm)
End A - Position B	7.069	7.07
End A - Position D	7.050	7.04
End A - Position F	7.038	7.03
End A - Position H	7.004	6.99
End B - Position B	7.191	7.17
End B - Position D	7.215	7.19
End B - Position F	7.132	7.11
End B - Position H	6.967	6.99

Micrometer ID:

Mitutoyo 0-1"
1": 1.00005" Calibration

Ultrasonic Probe ID:
Dakota Ultrasonics MVX
Velocity: 5907 m/s (Cal pt: 7.03mm)

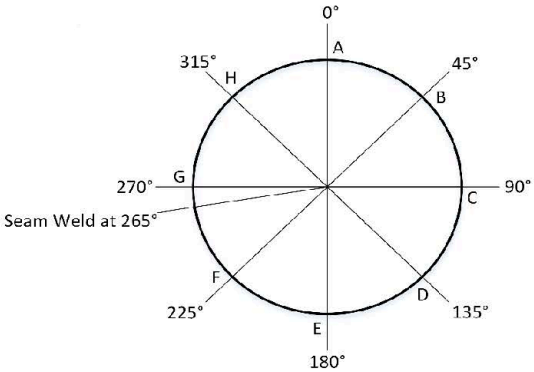

View from End A

Ultrasonic Measurements

Station	Circumferential Position							
	A	B	C	D	E	F	G	H
	Wall Thickness (mm)							
1	7.100	7.180	7.160	7.180	7.250	7.150	7.310	7.090
2	7.100	7.160	7.140	7.180	7.090	7.040	7.360	7.120
3	7.020	7.130	7.130	7.150	7.130	7.070	7.330	6.980
4	7.030	7.150	7.110	7.120	7.030	7.070	7.160	7.060
5	6.960	7.100	7.090	7.100	6.980	7.080	7.130	7.020
6	7.000	7.180	7.130	7.170	7.080	7.060	7.020	6.990
7	7.010	7.150	7.190	7.130	7.190	6.990	7.070	6.940
8	7.100	7.180	7.250	7.160	7.100	7.070	7.070	7.070

Average	7.11 mm
Std. dev	0.08 mm

Measurements Taken By:	Date:	Title:	C-FER Technologies
TCT	26-Oct-15	**Task 10 Bend and Burst Test**	
Measurements Approved By:	Date:	Specimen Identification:	Page 7 of 8
BCA	16-Dec-15	**10.c (Corrosion Bend & Burst 2)**	

Instrumentation Layout

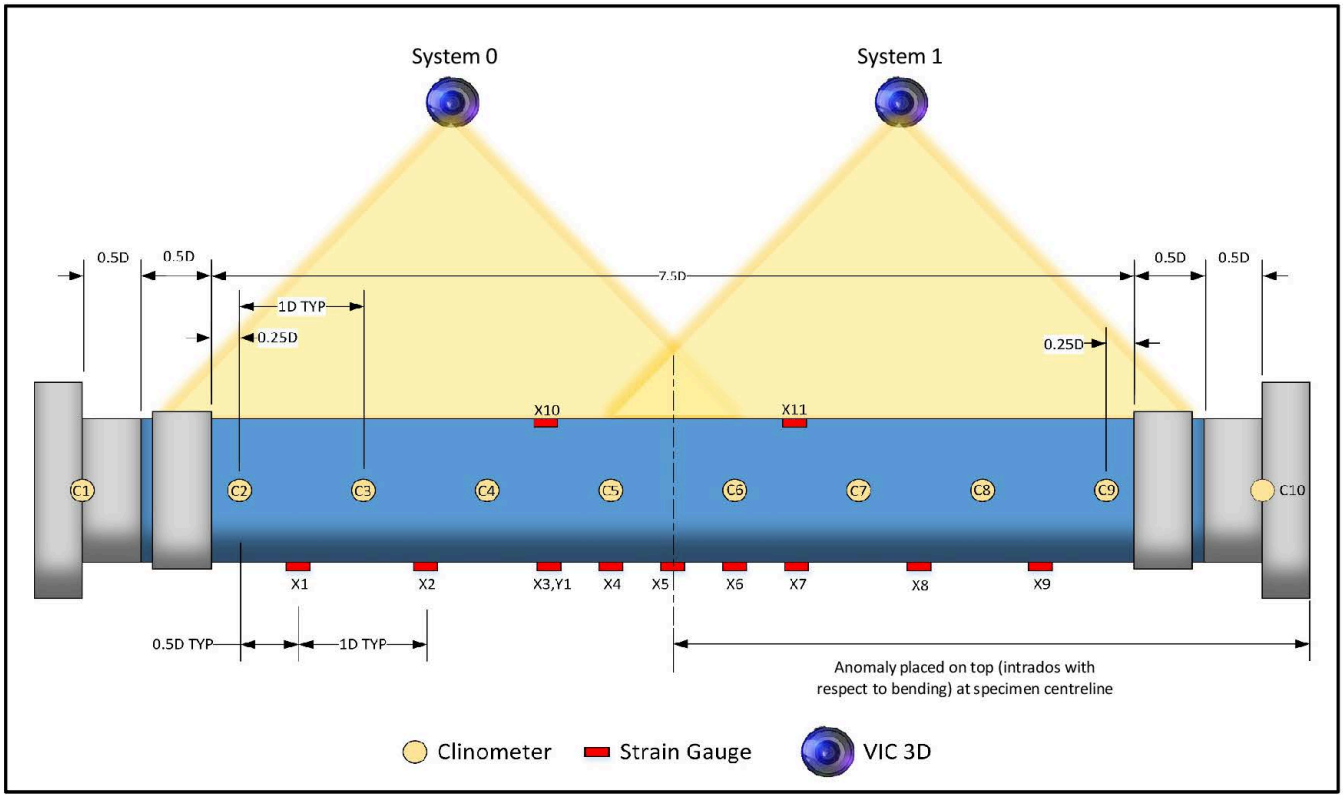

Drawing Done By:	Date:	Title:	C-FER Technologies
BCA	4-Feb-16	**Task 10 Bend and Burst Test**	
Drawing Approved By:	Date:	Specimen Identification:	Page 8 of 8
CMJT	18-Apr-17	**10.c (Corrosion Bend & Burst 2)**	