Strain-Based Design and Assessment in Critical Areas of Pipeline Systems with Realistic Anomalies

Appendix D: Task 9 Full-Scale Test Results

Draft Final Report

Contract No. DTPH56-14-H-00003

Prepared for

US Department of Transportation
Pipeline and Hazardous Materials Safety Administration
Office of Pipeline Safety

Prepared by

Brent Ayton, Jason Bergman, Mark Stephens, Chris Timms

C-FER Technologies

June 24, 2017

Notice

This project was funded by the Department of Transportation, Pipeline and Hazardous Materials Safety Administration under the Pipeline Safety Research and Development Program. The views and conclusions contained in this document are those of the authors and should not be interpreted as representing the official policies, either expressed or implied, of the Pipeline and Hazardous Materials Safety Administration, or the U.S. Government.

This work is the contribution of an agency of the U.S. government, and is not subject to copyright.

Table of Contents

Notice	i
Table of Contents	ii
Nomenclature	D-1
Abbreviations	D-1
Symbols	D-1
Organizations	D-1
Appendix D Task 9 Full-Scale Test Results	D-2
Task 9bl Baseline Bend Test	D-3
Task 9ai Transition Weld Bend Test 1	D-11
Task 9aii Transition Weld Bend Test 2	D-19
Task 9aiii Transition Weld Bend Test 3	D-27
Task 9bi Corrosion Bend Test 1	D-35
Task 9bii Corrosion Bend Test 2	D-43
Task 9biii Corrosion Bend Test 3	D-51
Task 9ci Dent Bend Test 1	D-59
Task 9cii Dent Bend Test 2	D-68
Task 9ciii Dent Bend Test 3	D-77

Nomenclature

Abbreviations

D	Diameter
D_{min}	Minimum Diameter
D_{may}	Maximum Diameter
D_{nom}	Nominal Diameter
OD	Outside Diameter
ID	Inside Diameter
1D	One Diameter
2D	Two Diameters
SMYS	Specified Minimum Yield Strength
VIC	Visual image correlation,

Symbols

ε	Strain

Organizations

PHMSA	Pipeline and Hazardous Materials Safety Administration,
C-FER	C-FER Technologies Inc. (1999)
CRES	Center for Reliable Energy Systems

Appendix D Task 9 Full-Scale Test Results

Task 9 Baseline Bend Test

Specimen Identification:	**9 (Baseline)**	C-FER Test Summary:	**Rev. 2, June 23, 2017**
C-FER Specimen Number:	**X65-ERW-1-3-9BL**	Test Date:	**August 21, 2015**

Nominal Pipe Characteristics

Nominal OD (mm) =	323.85
Average OD (mm) =	324.02
Nominal Wall Thickness (mm) =	6.35
Average Wall Thickness (mm) =	6.46
Specimen Length (mm) =	2689
Length/OD =	8.3
SMYS (MPa) =	448

Test Loading Procedure

1. The specimen was pressurized to 72% SMYS while applying compressive force to compensate for the end cap load.
2. The specimen was bent to the maximum displacement possible within the test frame.

Test Parameters

Target Net Pressure (MPa) =	12.65
Test Average Net Pressure (MPa) =	12.65

Test Results

Peak End Moment (kN-m) =	178
Peak Local Moment* (kN-m) =	281

Strains Across Buckle at Peak Moment

1D Strain - Discrete (%) =	-3.5
1D Strain - VIC (%) =	-3.6
2D Strain - VIC (%) =	-3.3

Failure Mode

Outward buckle formed 53 mm from the specimen midpoint.

*Local Moment taken at specimen midpoint

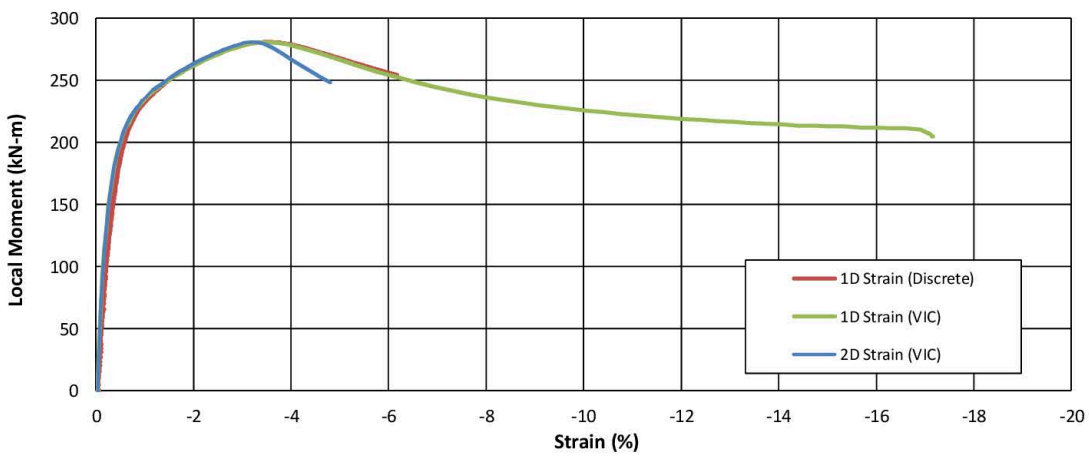

General Comments:
2D VIC strain calculation stopped at -4.8% due to image processing error.

Post Test:

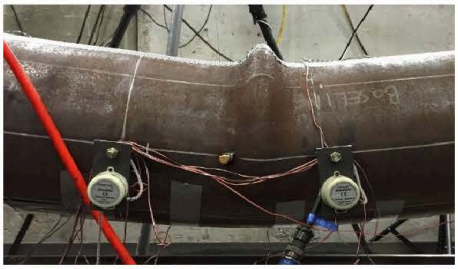

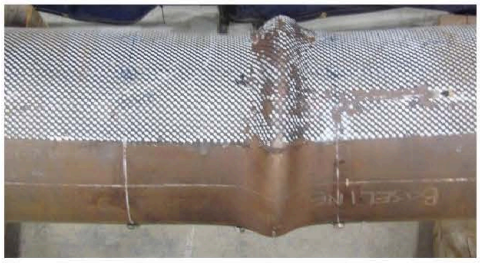

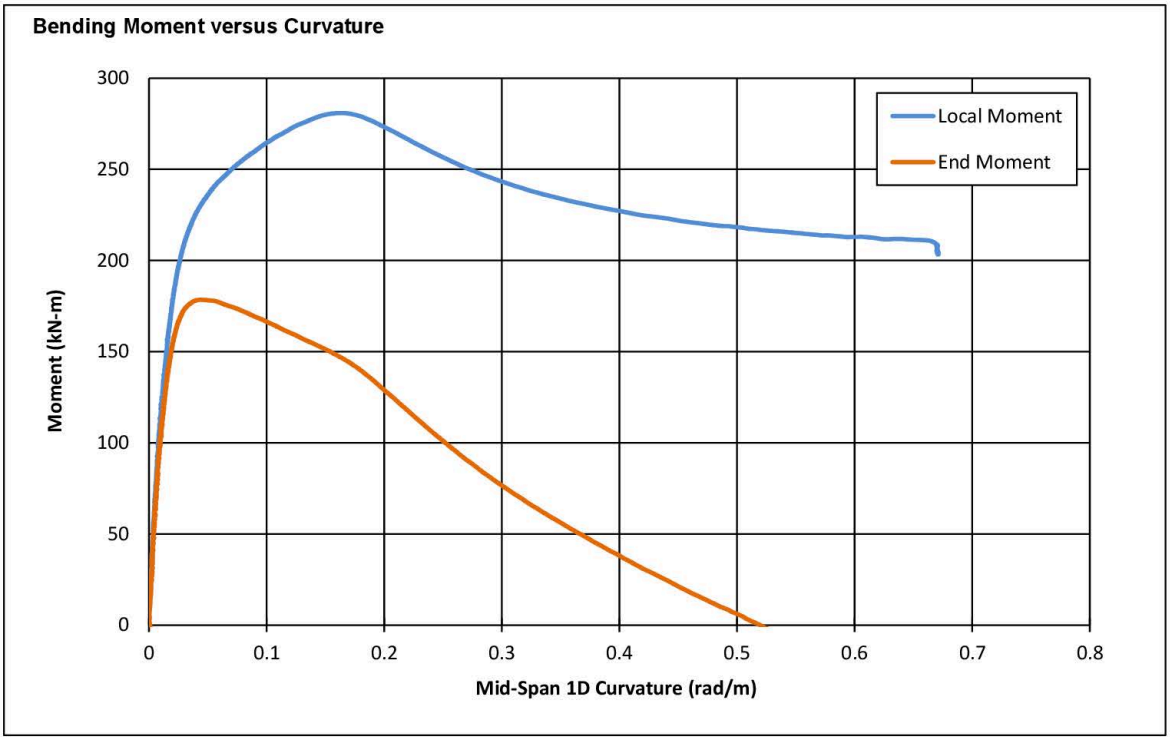

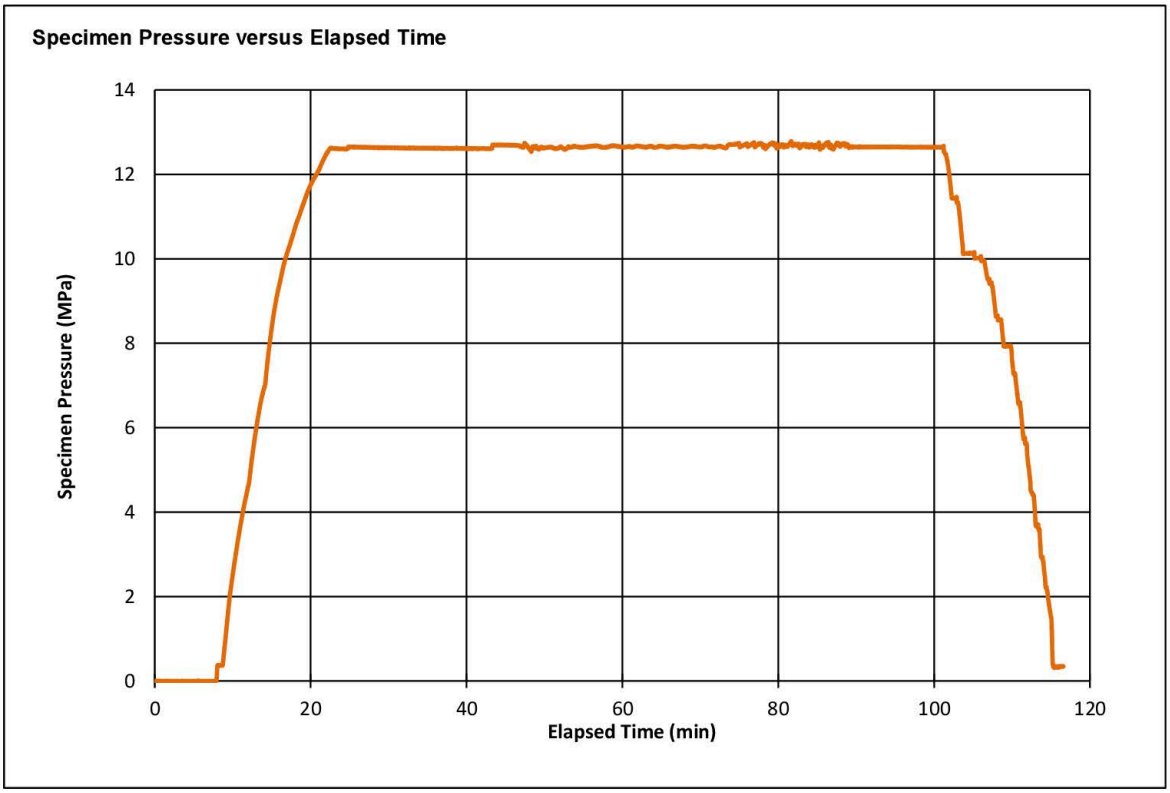

Compiled By:	Date:	Title:	C-FER Technologies
BCA	4-Feb-16	**Task 9 Baseline Bend Test**	
Reviewed:	Date:	Specimen Identification:	
CMJT	6-Apr-17	**9 (Baseline)**	Page 2 of 8

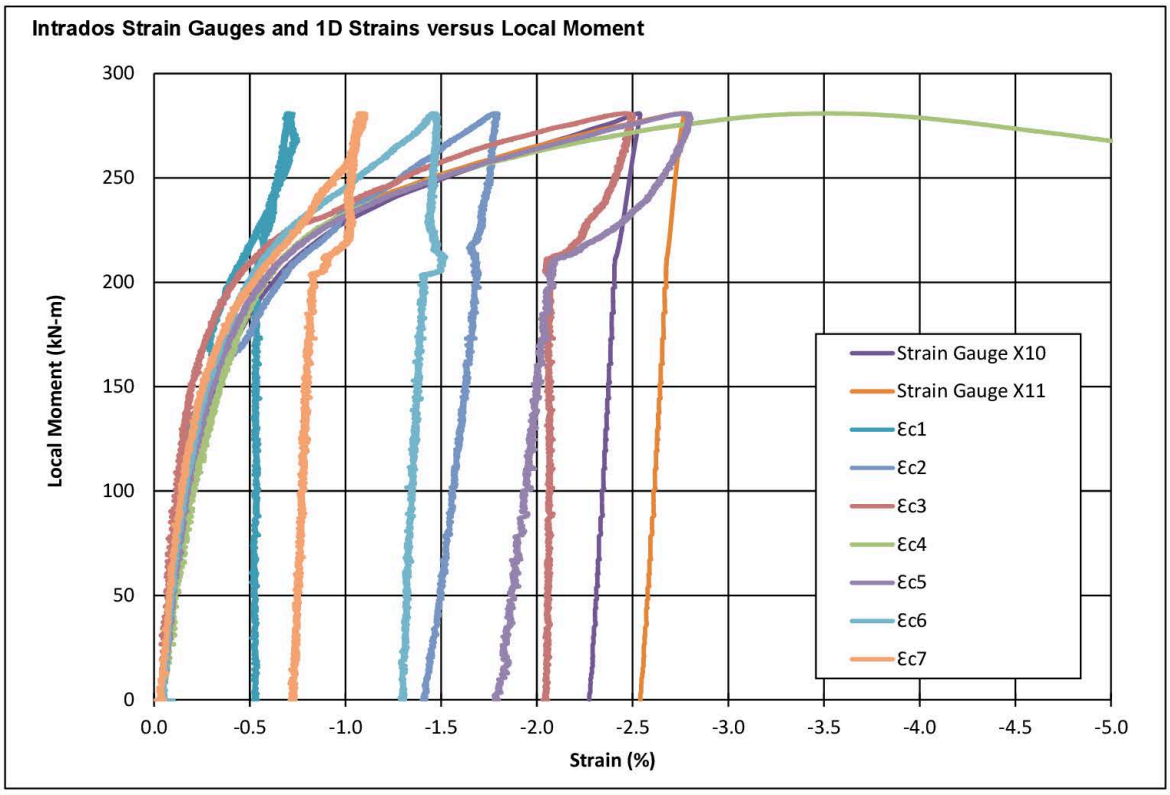

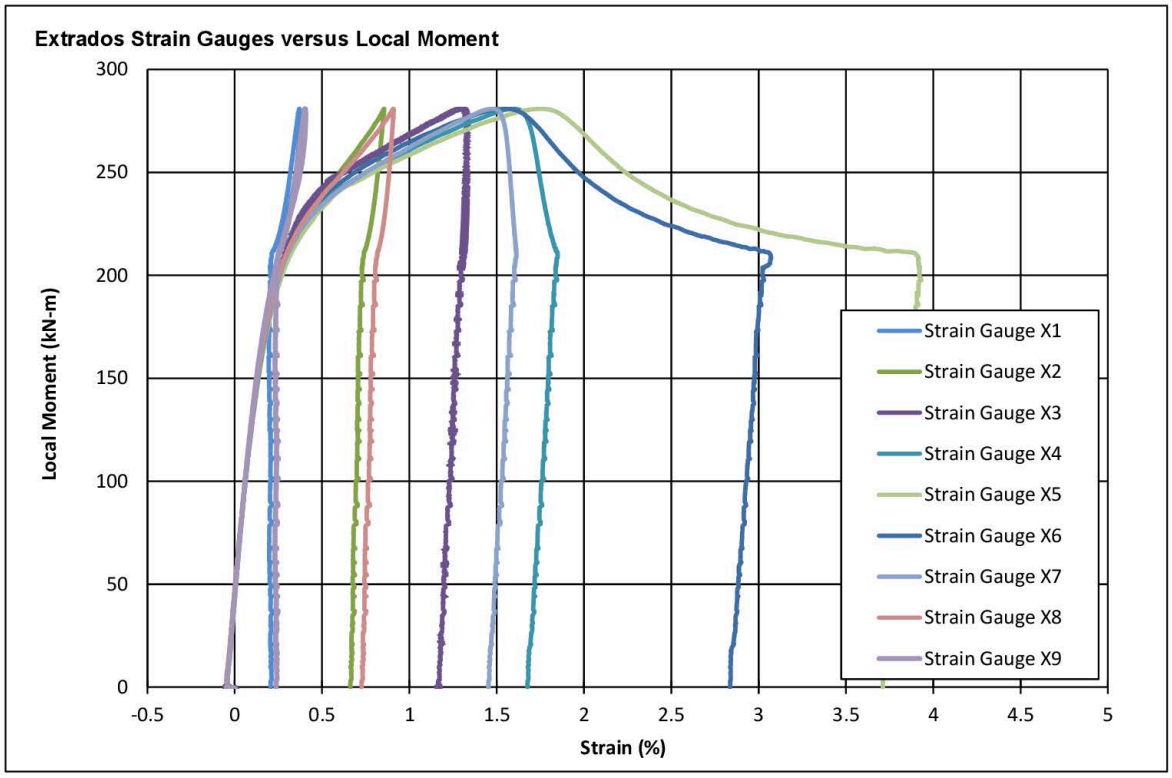

Compiled By:	Date:	Title:	C-FER Technologies
BCA	4-Feb-16	**Task 9 Baseline Bend Test**	
Reviewed:	Date:	Specimen Identification:	Page 3 of 8
CMJT	6-Apr-17	**9 (Baseline)**	

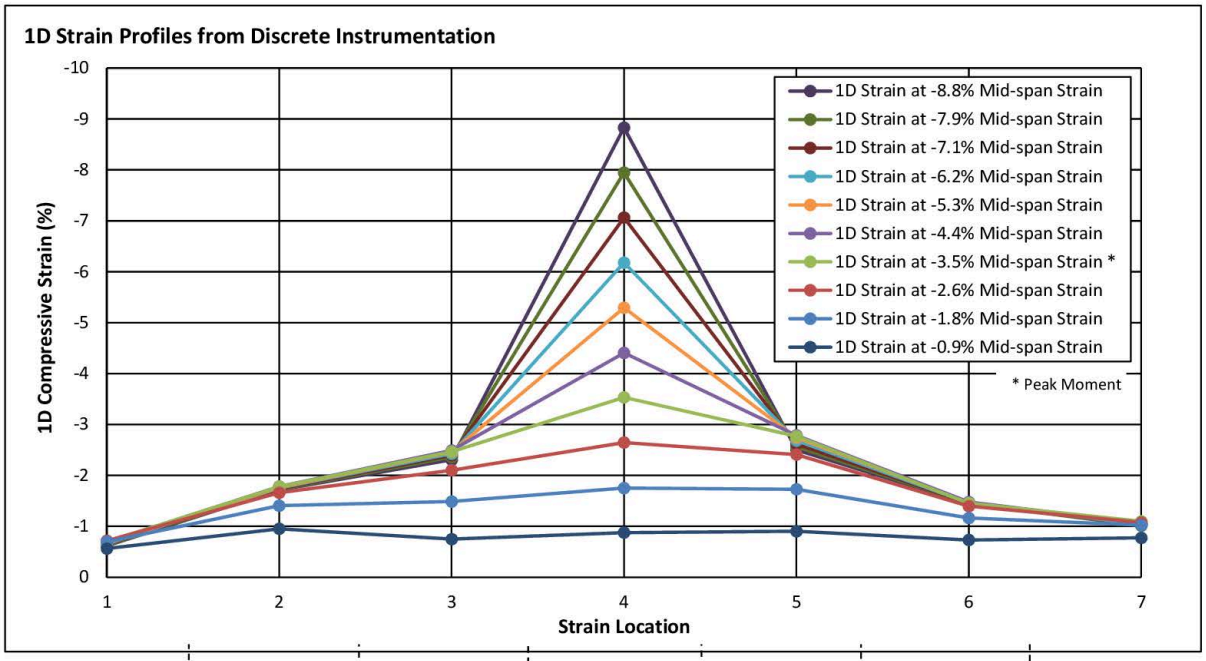

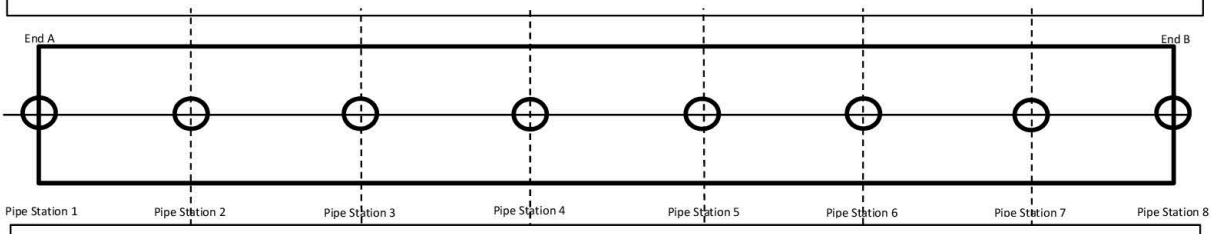

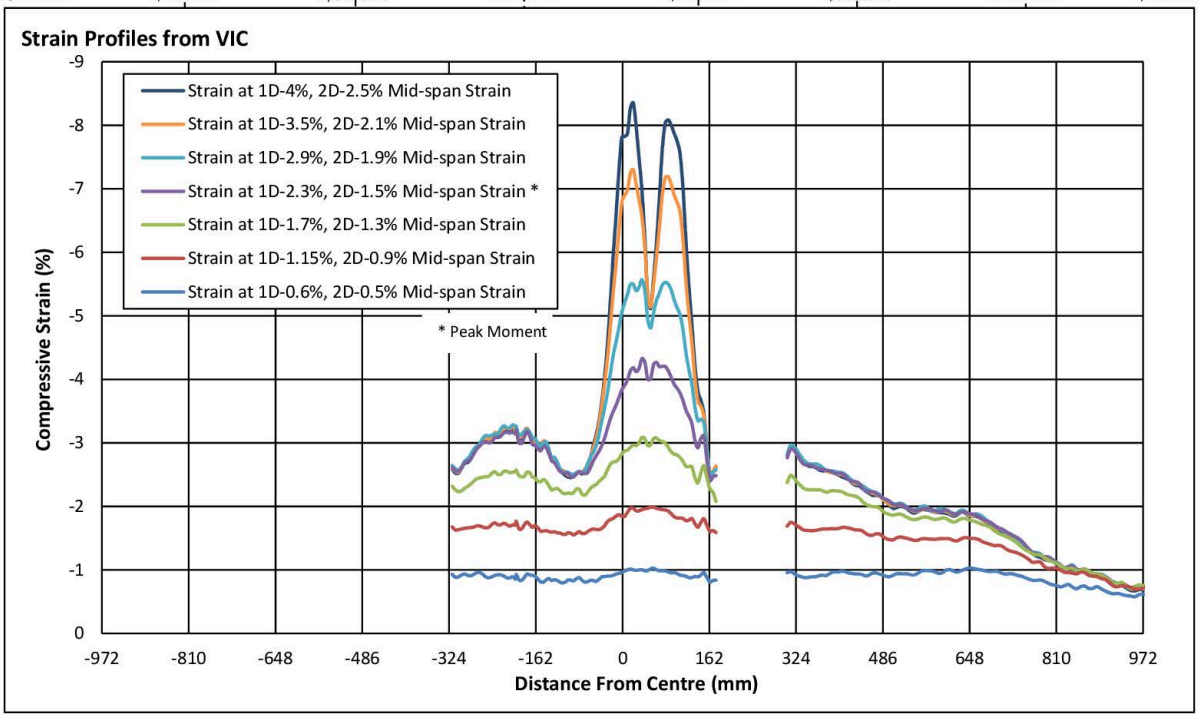

Compiled By:	Date:	Title:	C-FER Technologies
BCA	4-Feb-16	**Task 9 Baseline Bend Test**	
Reviewed:	Date:	Specimen Identification:	Page 4 of 8
CMJT	5-Apr-17	**9 (Baseline)**	

Pipe Measurements

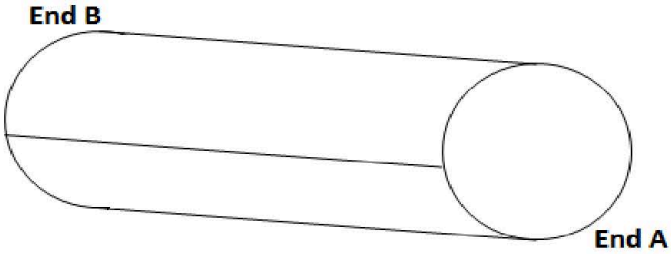

Pipe Specimen

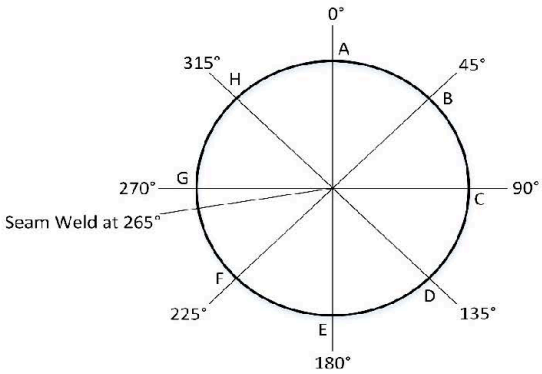

View from End A

Pre test Pup Lengths:

End A to 1	217	mm
1 to 2	322	mm
2 to 3	320	mm
3 to 4	324	mm
4 to 5	326	mm
5 to 6	322	mm
6 to 7	325	mm
7 to 8	321	mm
8 to End B	212	mm
Total Length	2 689	mm

Pre Test Pipe Lengths:

Position B	2 688	mm
Position D	2 690	mm
Position F	2 687	mm
Position H	2 689	mm
Average	2 689	mm

Circumferences:

End A measured circumference	1 019	mm
End B measured circumference	1 019	mm

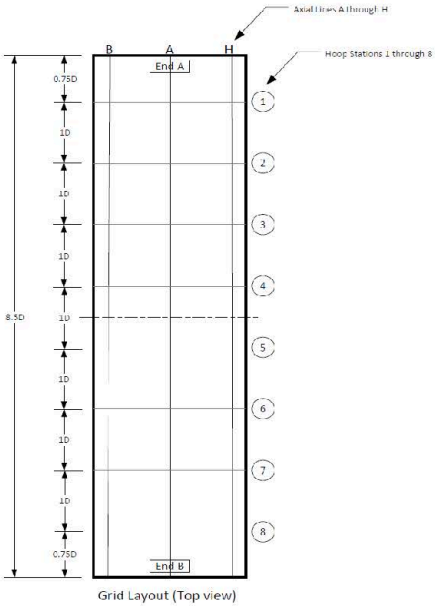

Measurement Grid

Measurements Taken By:	Date:	Title:	C-FER Technologies
TUT	18-Aug-15	**Task 9 Baseline Bend Test**	
Measurements Approved By:	Date:	Specimen Identification:	Page 5 of 8
JHB	18-Aug-15	**9 (Baseline)**	

Diameter Measurements

Micrometer:

Verification Rod 1	0.000	in
Verification Rod 2	0.000	in

Diameters in inches (as measured)

Station	Spanned Positions (in)			
	0° to 180°	45° to 225°	90° to 270°	135° to 315°
1	12.750	12.779	12.738	12.719
2	12.807	12.779	12.730	12.740
3	12.810	12.775	12.711	12.741
4	12.813	12.771	12.719	12.720
5	12.806	12.761	12.719	12.726
6	12.815	12.760	12.723	12.760
7	12.807	12.766	12.714	12.746
8	12.774	12.758	12.733	12.748

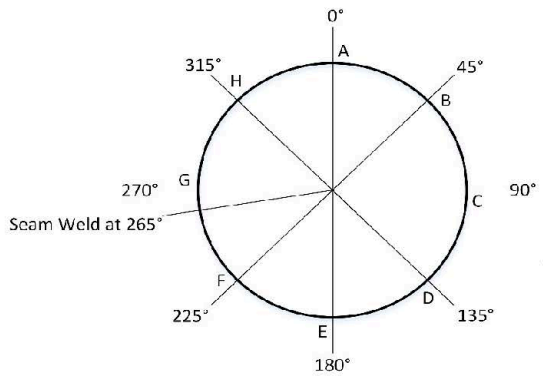

View from End A

Diameters in millimeters (converted)

Station	Spanned Positions (mm)			
	0° to 180°	45° to 225°	90° to 270°	135° to 315°
1	323.85	324.59	323.55	323.06
2	325.30	324.59	323.34	323.60
3	325.37	324.49	322.86	323.62
4	325.45	324.38	323.06	323.09
5	325.27	324.13	323.06	323.24
6	325.50	324.10	323.16	324.10
7	325.30	324.26	322.94	323.75
8	324.46	324.05	323.42	323.80

Station	Max. OD (mm)	@ Position	Min. OD (mm)	@ Position	Average OD (mm)	Standard Deviation (mm)	Ovality* (%)	Ovality incl. angle (°)
1	324.59	45	323.06	135	323.76	0.64	0.47	90
2	325.30	0	323.34	90	324.21	0.90	0.60	90
3	325.37	0	322.86	90	324.08	1.09	0.78	90
4	325.45	0	323.06	90	324.00	1.15	0.74	90
5	325.27	0	323.06	90	323.93	1.01	0.68	90
6	325.50	0	323.16	90	324.22	0.96	0.72	90
7	325.30	0	322.94	90	324.06	0.99	0.73	90
8	324.46	0	323.42	90	323.93	0.44	0.32	90

$$^{*}\ Ovality = \frac{(D_{\max} - D_{\min})}{(D_{nom})} * 100\%$$

Measurements Taken By:	Date:	Title:	C-FER Technologies
TUT	18-Aug-15	**Task 9 Baseline Bend Test**	
Measurements Approved By:	Date:	Specimen Identification:	Page 6 of 8
JHB	18-Aug-15	**9 (Baseline)**	

Wall Thickness Measurements

Micrometer Measurements
Pipe Ring Verification

	Micrometer (mm)	Ultrasonic probe (mm)
End A - Position B	6.360	6.33
End A - Position D	6.440	6.42
End A - Position F	6.430	6.40
End A - Position H	6.410	6.40
End B - Position B	6.420	6.45
End B - Position D	6.420	6.42
End B - Position F	6.380	6.36
End B - Position H	6.410	6.41

Micrometer ID:

Mitutoyo 0-1" (HTS)
1": 1.00030"

Ultrasonic Probe ID:
Dakota Ultrasonics MVX +/-0.001"
Velocity: 5904 m/s

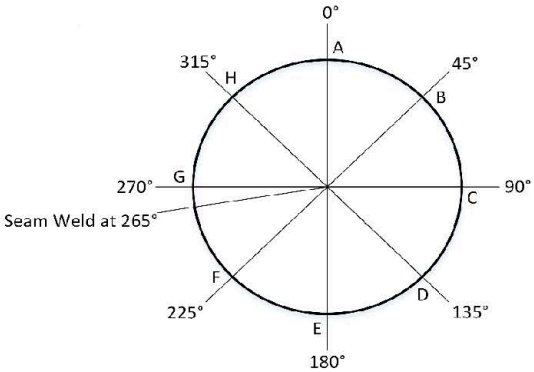

View from End A

Ultrasonic Measurements

Station	Circumferential Position							
	A	B	C	D	E	F	G	H
	Wall Thickness (mm)							
1	6.450	6.490	6.620	6.470	6.310	6.490	6.500	6.460
2	6.450	6.470	6.590	6.470	6.270	6.480	6.400	6.460
3	6.460	6.500	6.580	6.490	6.230	6.460	6.480	6.450
4	6.460	6.480	6.580	6.510	6.310	6.500	6.510	6.470
5	6.490	6.490	6.600	6.460	6.360	6.440	6.460	6.450
6	6.460	6.530	6.560	6.440	6.260	6.480	6.490	6.430
7	6.440	6.490	6.540	6.440	6.310	6.460	6.440	6.460
8	6.450	6.500	6.580	6.440	6.270	6.480	6.490	6.460

Average	6.46 mm
Std. dev	0.08 mm

Measurements Taken By:	Date:	Title:	C-FER Technologies
TUT	18-Aug-15	**Task 9 Baseline Bend Test**	
Measurements Approved By:	Date:	Specimen Identification:	Page 7 of 8
JHB	18-Aug-15	**9 (Baseline)**	

Instrumentation Layout

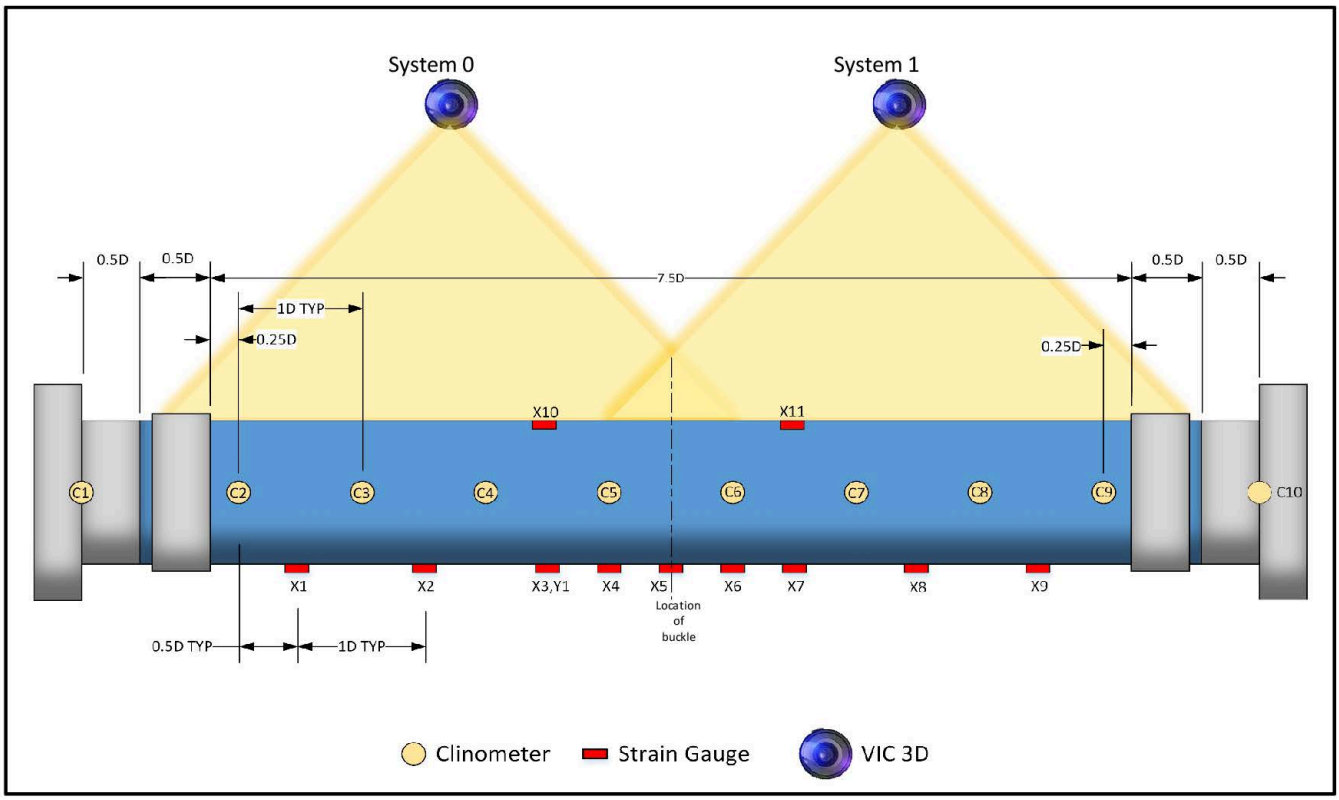

Drawing Done By:	Date:	Title:	C-FER Technologies
BCA	4-Feb-16	**Task 9 Baseline Bend Test**	
Drawing Approved By:	Date:	Specimen Identification:	Page 8 of 8
CMJT	6-Apr-17	**9 (Baseline)**	

Task 9.a Transition Weld Bend Test

Specimen Identification:	**9.a.i (Transition 1)**	C-FER Test Summary:	**Rev. 2, June 23, 2017**
C-FER Specimen Number (End A):	**X65-ERW-1-3-9AI**	Test Date:	**February 2, 2016**
C-FER Specimen Number (End B):	**X65-ERW-1-3-9ASP**		

Nominal Pipe Characteristics

	End A	End B
Nominal OD (mm) =	323.85	323.85
Average OD (mm) =	323.98	323.94
Nominal Wall Thickness (mm) =	6.35	6.35
Average Wall Thickness (mm) =	6.55	6.60
Specimen Length (mm) =	1511	1191
Length/OD =	4.7	3.7
SMYS (MPa) =	448	448

Test Loading Procedure

1. The specimen was pressurized to 72% SMYS while applying compressive force to compensate for the end cap load.
2. The specimen was bent to the maximum displacement possible within the test frame.

Test Parameters

Target Net Pressure (MPa) =	12.65
Test Average Net Pressure (MPa) =	12.66

Test Results

Peak End Moment (kN-m) =	171
Peak Local Moment* (kN-m) =	254

Strains Across Buckle at Peak Moment

1D Strain - Discrete (%) =	-2.2
1D Strain - VIC (%) =	-2.8
2D Strain - VIC (%) =	-2.2
0.5D Strain One Sided - VIC (%) =	-3.2
1D Strain One Sided - VIC (%) =	-2.8

Anomaly - Transition Weld

Girth weld transition
6.35mm to 6.35mm

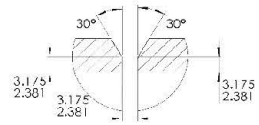

Failure Mode

Outward buckle approximately 25mm from specimen midpoint

*Local Moment taken at specimen midpoint

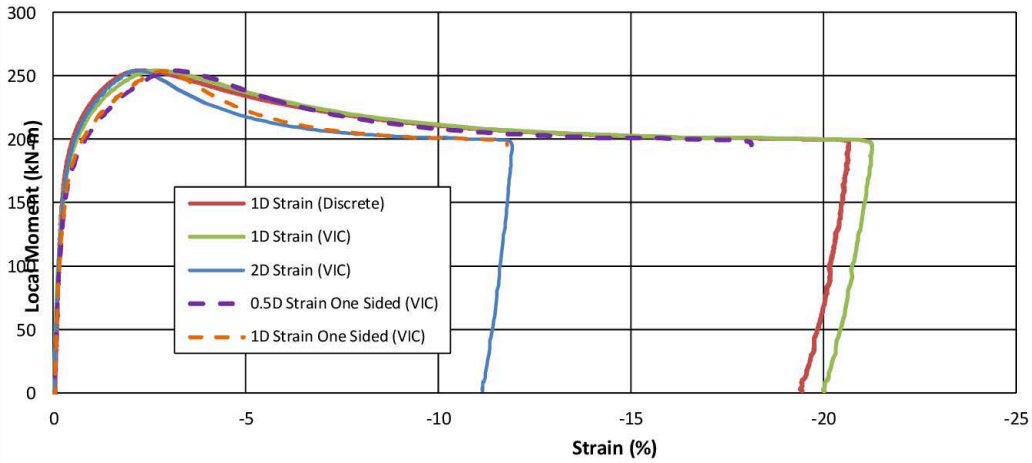

General Comments:

Post Test:

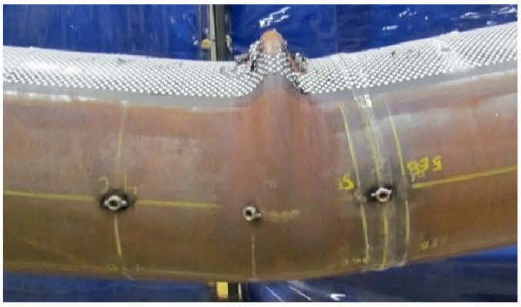

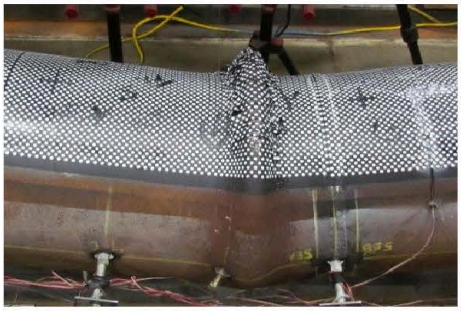

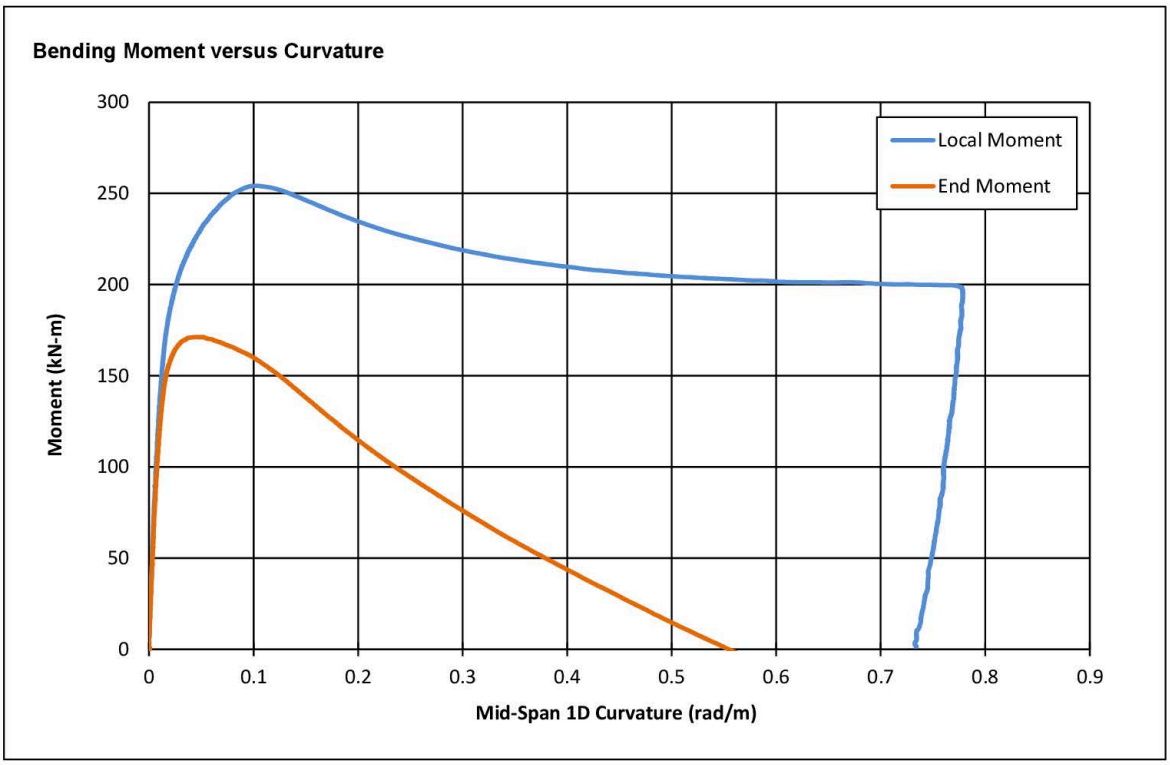

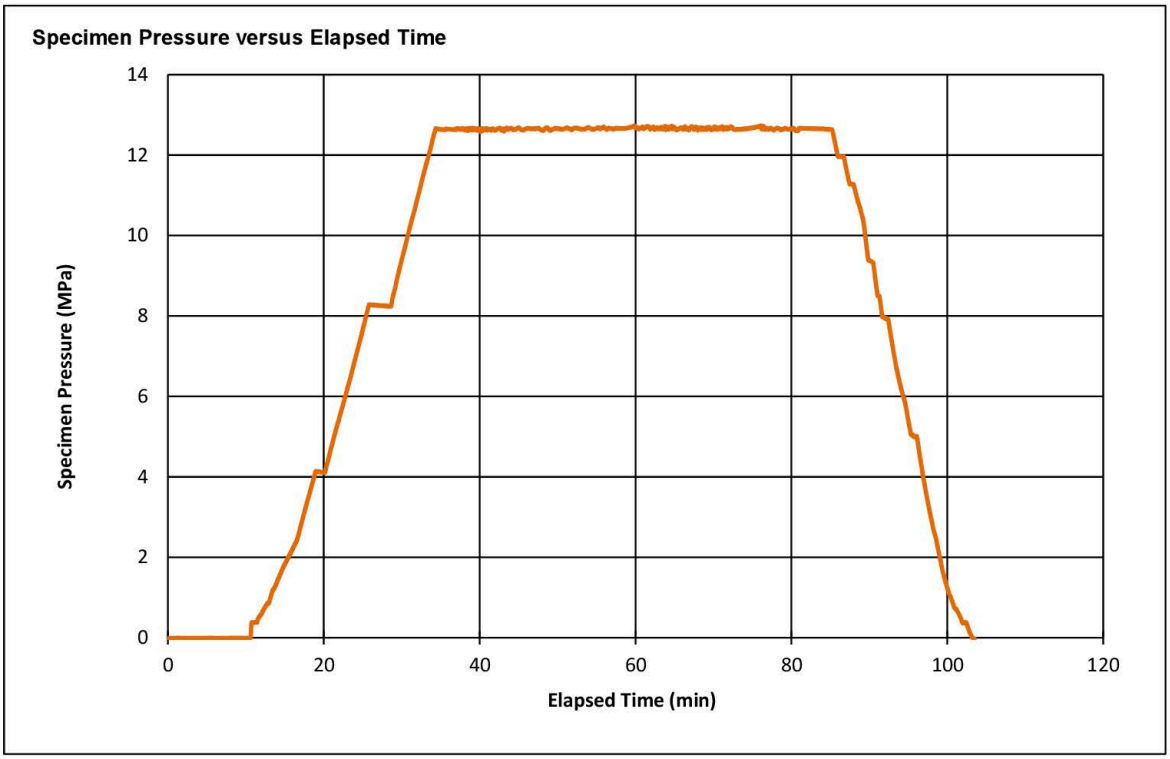

Compiled By:	Date:	Title:	C-FER Technologies
BCA	15-Mar-16	**Task 9.a Transition Weld Bend Test**	
Reviewed:	Date:	Specimen Identification:	
CMJT	5-Apr-17	**9.a.i (Transition 1)**	Page 2 of 8

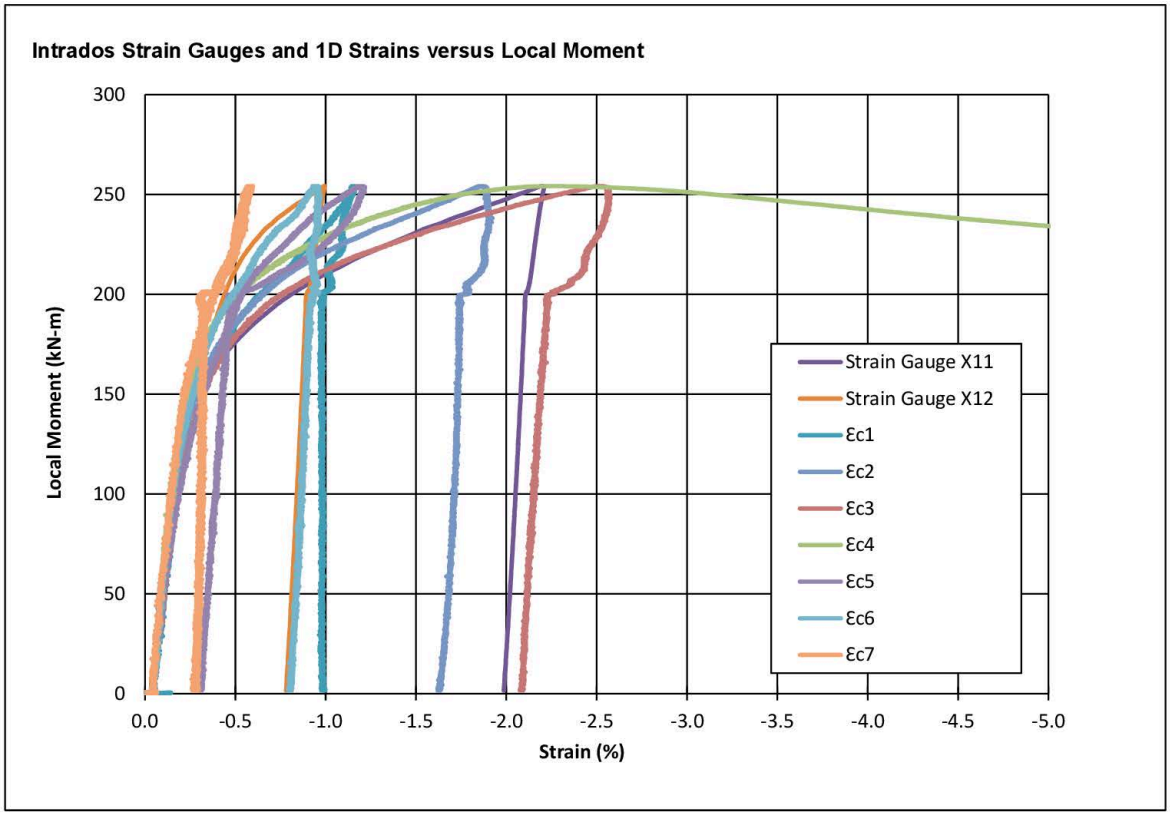
Intrados Strain Gauges and 1D Strains versus Local Moment
Local Moment (kN-m)
Strain (%)
300
250
200
150
100
50
0
0.0
-0.5
-1.0
-1.5
-2.0
-2.5
-3.0
-3.5
-4.0
-4.5
-5.0
Strain Gauge X11
Strain Gauge X12
Ɛc1
Ɛc2
Ɛc3
Ɛc4
Ɛc5
Ɛc6
Ɛc7

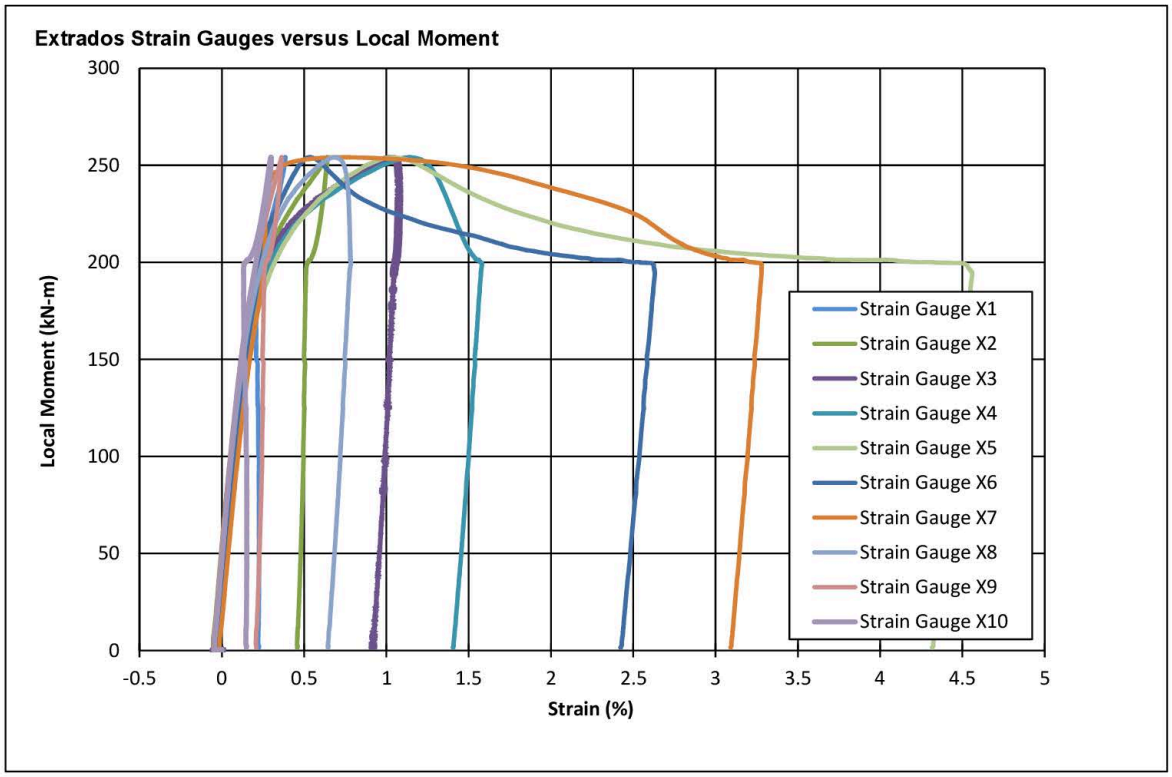
Extrados Strain Gauges versus Local Moment
Local Moment (kN-m)
Strain (%)
300
250
200
150
100
50
0
-0.5
0
0.5
1
1.5
2
2.5
3
3.5
4
4.5
5
Strain Gauge X1
Strain Gauge X2
Strain Gauge X3
Strain Gauge X4
Strain Gauge X5
Strain Gauge X6
Strain Gauge X7
Strain Gauge X8
Strain Gauge X9
Strain Gauge X10

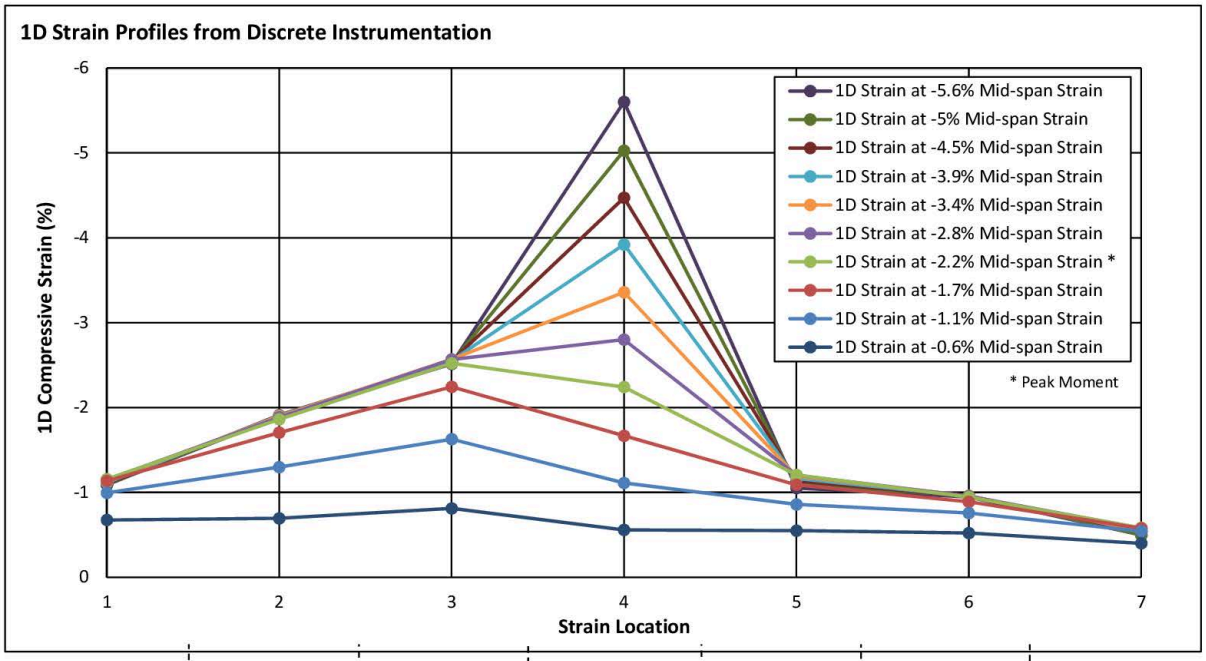

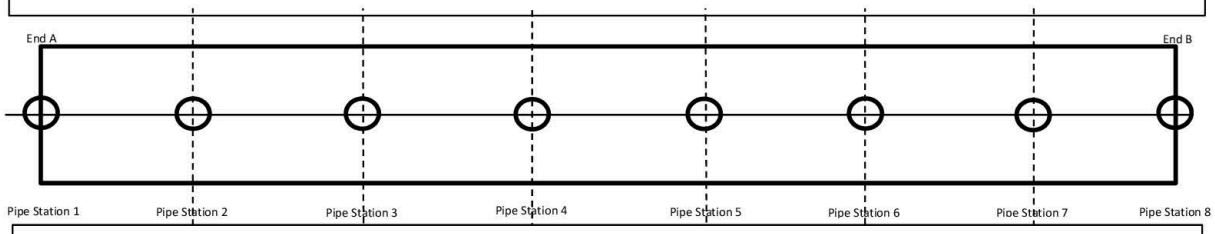

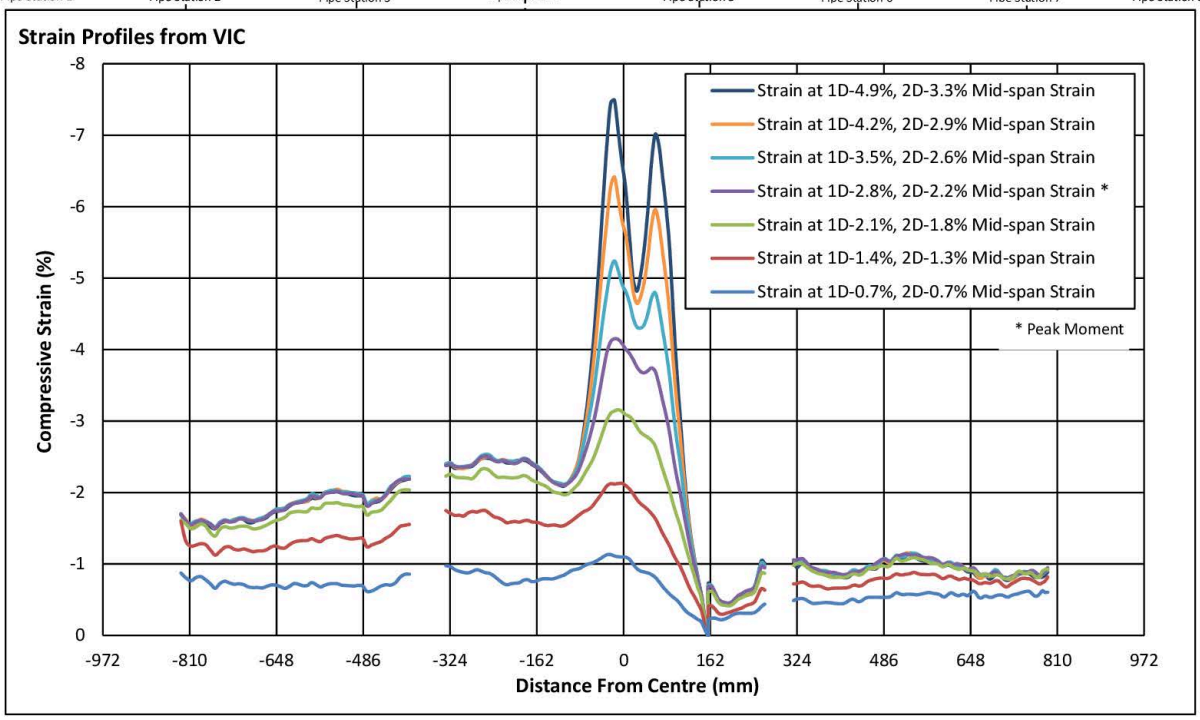

Compiled By:	Date:	Title:	C-FER Technologies
BCA	15-Mar-16	**Task 9.a Transition Weld Bend Test**	
Reviewed:	Date:	Specimen Identification:	Page 4 of 8
CMJT	5-Apr-17	**9.a.i (Transition 1)**	

Pipe Measurements

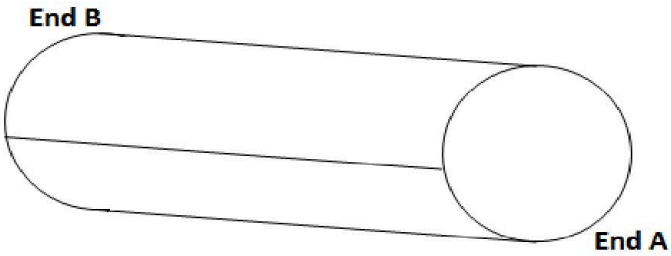

Pipe Specimen

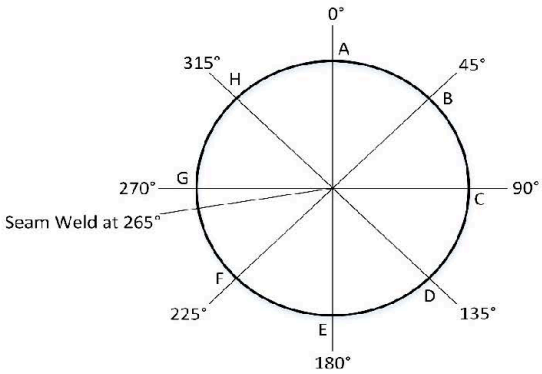

View from End A

Pre test Pup Lengths:

End A to 1	216	mm
1 to 2	323	mm
2 to 3	324	mm
3 to 4	324	mm
4 to 5	324	mm
5 to 6	326	mm
6 to 7	324	mm
7 to 8	323	mm
8 to End B	218	mm
Total Length	2 702	mm

Pre Test Pipe Lengths:

Position B	2 703	mm
Position D	2 702	mm
Position F	2 701	mm
Position H	2 702	mm
Average	2 702	mm

Circumferences:

End A measured circumference	1 020	mm
End B measured circumference	1 020	mm

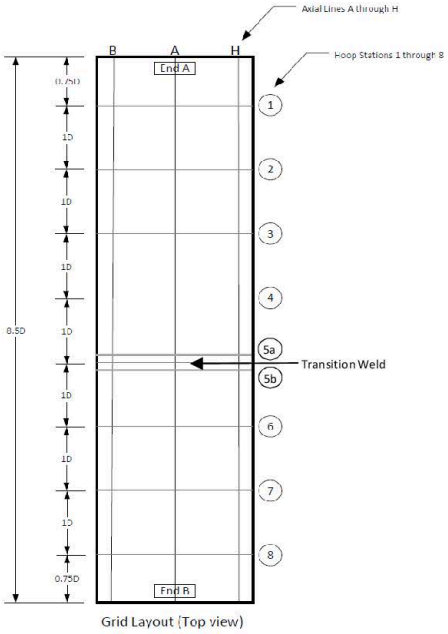

Measurement Grid

Note: Stations 5a and 5b were measured 51mm on either side of the center of the transition weld.

Measurements Taken By:	Date:	Title:	C-FER Technologies
CED	28-Jan-16	**Task 9.a Transition Weld Bend Test**	
Measurements Approved By:	Date:	Specimen Identification:	Page 5 of 8
BCA	28-Jan-16	**9.a.i (Transition 1)**	

Diameter Measurements

Micrometer:

Verification Rod 1	0.001	in
Verification Rod 2	0.001	in

Diameters in inches (as measured)

Station	Spanned Positions (in)			
	0° to 180°	45° to 225°	90° to 270°	135° to 315°
1	12.787	12.733	12.713	12.777
2	12.803	12.723	12.710	12.793
3	12.810	12.742	12.724	12.784
4	12.802	12.740	12.717	12.781
5a	12.769	12.720	12.703	12.768
5b	12.747	12.750	12.716	12.746
6	12.780	12.752	12.725	12.770
7	12.780	12.748	12.722	12.782
8	12.784	12.757	12.721	12.775

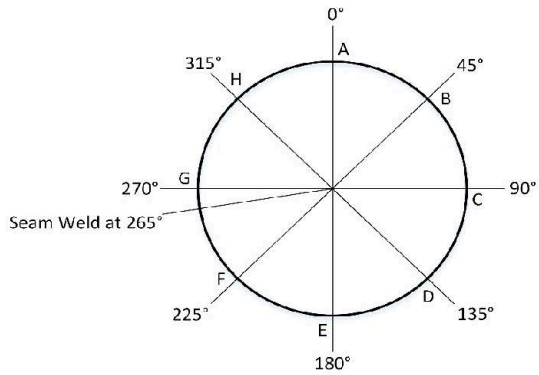

View from End A

Diameters in millimeters (converted)

Station	Spanned Positions (mm)			
	0° to 180°	45° to 225°	90° to 270°	135° to 315°
1	324.79	323.42	322.91	324.54
2	325.20	323.16	322.83	324.94
3	325.37	323.65	323.19	324.71
4	325.17	323.60	323.01	324.64
5a	324.33	323.09	322.66	324.31
5b	323.77	323.85	322.99	323.75
6	324.61	323.90	323.22	324.36
7	324.61	323.80	323.14	324.66
8	324.71	324.03	323.11	324.49

Station	Max. OD (mm)	@ Position	Min. OD (mm)	@ Position	Average OD (mm)	Standard Deviation (mm)	Ovality* (%)	Ovality incl. angle (°)
1	324.79	0	322.91	90	323.91	0.90	0.58	90
2	325.20	0	322.83	90	324.03	1.21	0.73	90
3	325.37	0	323.19	90	324.23	0.99	0.67	90
4	325.17	0	323.01	90	324.10	0.98	0.67	90
5a	324.33	0	322.66	90	323.60	0.85	0.52	90
5b	323.85	45	322.99	90	323.59	0.40	0.27	45
6	324.61	0	323.22	90	324.02	0.61	0.43	90
7	324.66	135	323.14	90	324.05	0.73	0.47	45
8	324.71	0	323.11	90	324.08	0.71	0.49	90

$$^{*}\ Ovality = \frac{(D_{\max} - D_{\min})}{(D_{nom})} * 100\%$$

Measurements Taken By:	Date:	Title:	C-FER Technologies
PHB	26-Jan-16	**Task 9.a Transition Weld Bend Test**	
Measurements Approved By:	Date:	Specimen Identification:	Page 6 of 8
BCA	28-Jan-16	**9.a.i (Transition 1)**	

Wall Thickness Measurements

Micrometer Measurements
Pipe Ring Verification

End A
F141009-CP3-9ASP

	Micrometer (mm)	Ultrasonic probe (mm)
End A - Position B	6.330	6.33
End A - Position D	6.060	6.06
End A - Position F	6.304	6.33
End A - Position H	6.300	6.27
End B - Position B	6.160	6.14
End B - Position D	6.207	6.22
End B - Position F	6.126	6.11
End B - Position H	6.259	6.24

End B
F141009-CP3-9AI

	Micrometer (mm)	Ultrasonic probe (mm)
End A - Position B	6.060	6.08
End A - Position D	6.378	6.35
End A - Position F	6.384	6.36
End A - Position H	6.161	6.18
End B - Position B	6.336	6.33
End B - Position D	6.330	6.32
End B - Position F	6.170	6.16
End B - Position H	6.334	6.35

Micrometer ID:

Mitutoyo 0-1"
1": 1.00005" Calibration

Ultrasonic Probe ID:
Dakota Ultrasonics MVX

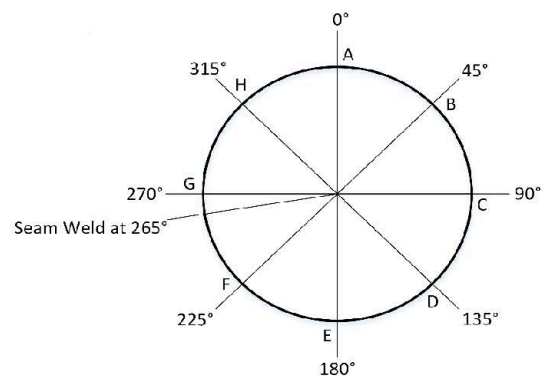

View from End A

Ultrasonic Measurements

Station	Circumferential Position							
	A	B	C	D	E	F	G	H
	Wall Thickness (mm)							
1	6.40	6.54	6.59	6.45	6.49	6.49	6.75	6.44
2	6.44	6.54	6.57	6.42	6.47	6.50	6.89	6.45
3	6.44	6.50	6.60	6.46	6.49	6.49	6.96	6.46
4	6.46	6.50	6.61	6.50	6.50	6.53	6.99	6.44
5a	6.48	6.53	6.61	6.49	6.53	6.58	7.01	6.47
5b	6.52	6.56	6.67	6.58	6.52	6.49	6.77	6.59
6	6.55	6.50	6.60	6.57	6.45	6.44	6.85	6.52
7	6.55	6.60	6.67	6.57	6.56	6.50	7.22	6.53
8	6.55	6.59	6.65	6.50	6.41	6.61	7.04	6.53

Average	6.57 mm
Std. dev	0.16 mm

Measurements Taken By:	Date:	Title:	C-FER Technologies
PHB	26-Jan-16	**Task 9.a Transition Weld Bend Test**	
Measurements Approved By:	Date:	Specimen Identification:	Page 7 of 8
BCA	28-Jan-16	**9.a.i (Transition 1)**	

Instrumentation Layout

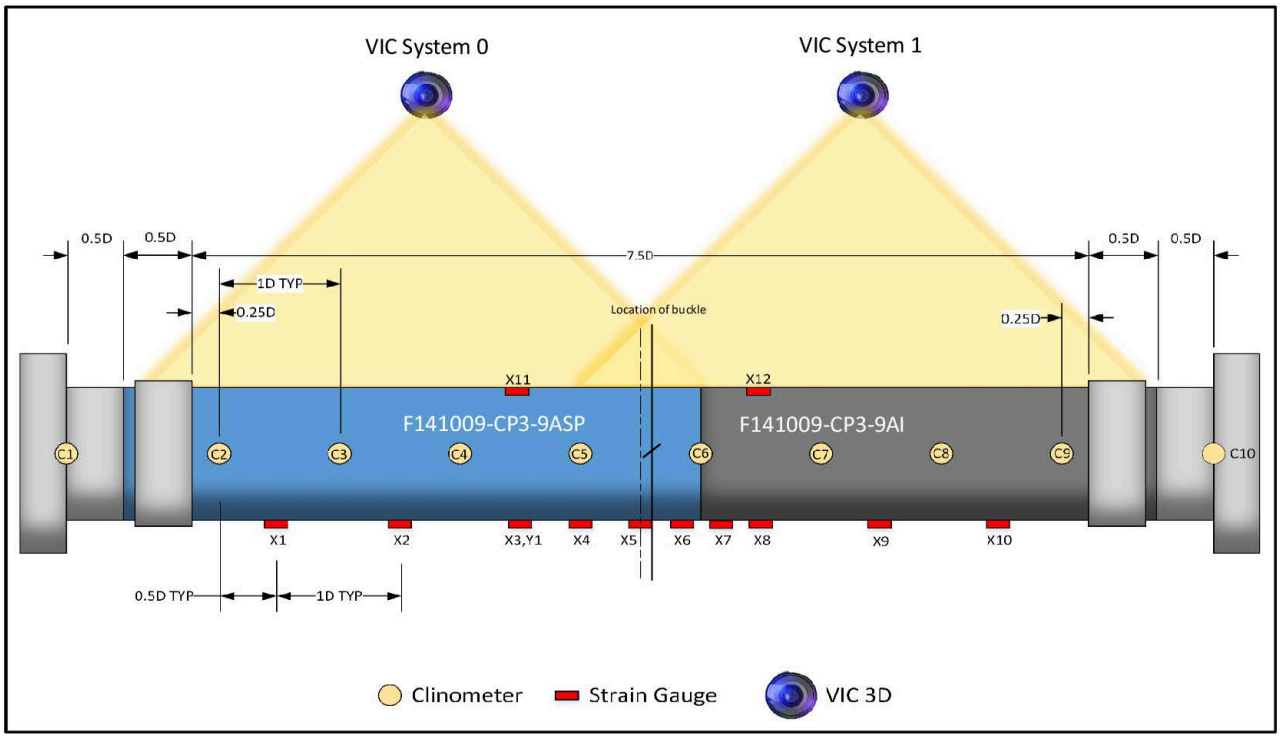

Anomaly - Transition Weld 6.35mm to 6.35mm nominal wt pipe

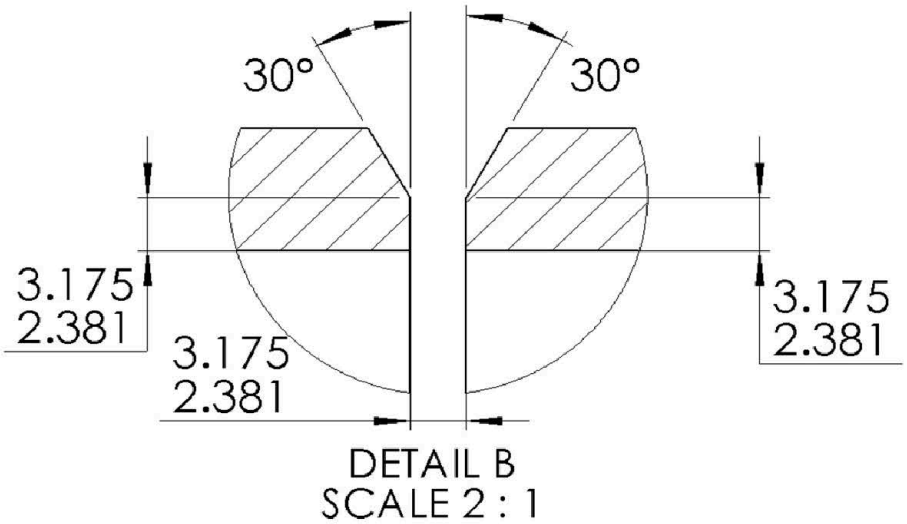

Drawing Done By:	Date:	Title:	C-FER Technologies
BCA	15-Mar-16	**Task 9.a Transition Weld Bend Test**	
Drawing Approved By:	Date:	Specimen Identification:	Page 8 of 8
CMJT	5-Apr-17	**9.a.i (Transition 1)**	

Task 9a Transition Weld Bend Test

Specimen Identification:	**9.a.ii (Transition 2)**	C-FER Test Summary:	**Rev. 1, June 23, 2017**
C-FER Specimen Number (End A):	**X65-ERW-1-3-9AII**	Test Date:	**February 24, 2016**
C-FER Specimen Number (End B):	**X65-ERW-2-9AII**		

Nominal Pipe Characteristics

	End A	End B
Nominal OD (mm) =	323.85	323.85
Average OD (mm) =	324.06	323.73
Nominal Wall Thickness (mm) =	6.35	9.53
Average Wall Thickness (mm) =	6.49	9.49
Specimen Length (mm) =	1515	1188
Length/OD =	4.7	3.7
SMYS (MPa) =	448	359

Test Loading Procedure

1. The specimen was pressurized to 72% SMYS while applying compressive force to compensate for the end cap load.
2. The specimen was bent to the maximum displacement possible within the test frame.

Test Parameters

Target Net Pressure (MPa) =	12.65
Test Average Net Pressure (MPa) =	12.66

Test Results

Peak End Moment (kN-m) =	172
Peak Local Moment* (kN-m) =	247

Strains Across Buckle at Peak Moment

1D Strain - Discrete (%) =	-3.0
1D Strain - VIC (%) =	-2.8
2D Strain - VIC (%) =	-2.0
0.5D Strain One Sided - VIC (%) =	-3.2
1D Strain One Sided - VIC (%) =	-2.8

Anomaly - Transition Weld

Girth weld transition
6.35mm to 9.53mm

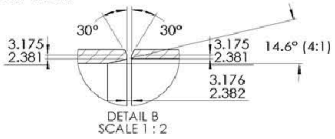

Failure Mode

Outward buckle approximately 38mm from specimen midpoint

*Local Moment taken at specimen midpoint

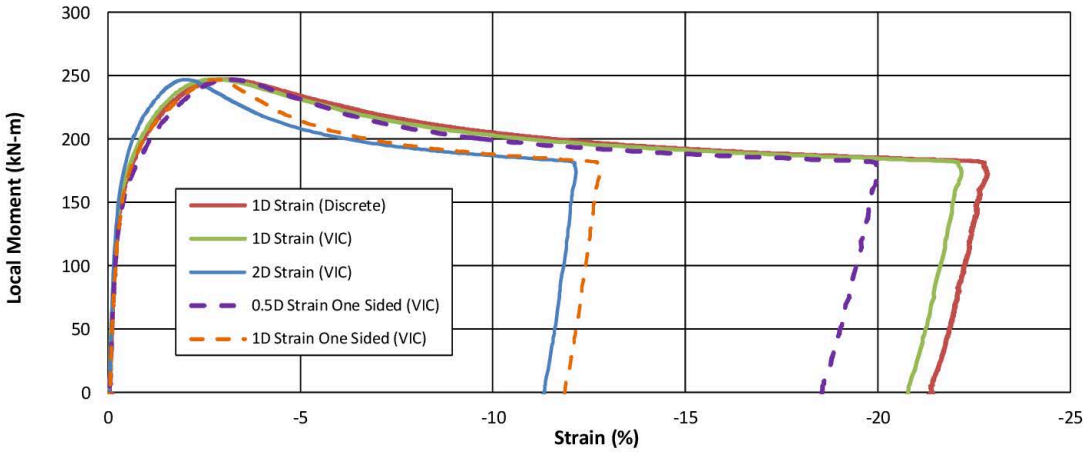

General Comments:

The cable pot measuring the specimen mid span deflection malfunctioned at a deflection of 4.6 inches (1D VIC Strain 6.3%, 2D VIC Strain 3.8%). Deflection derived from the clinometer measurements and spacing was used after this point to calculate the local moment.

Post Test:

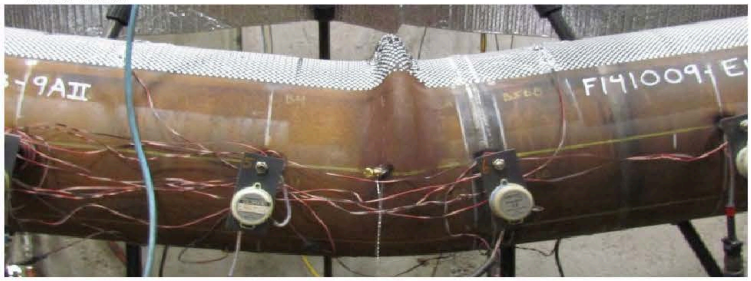

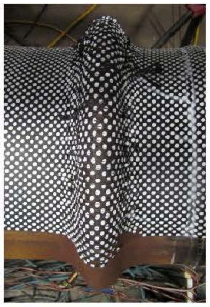

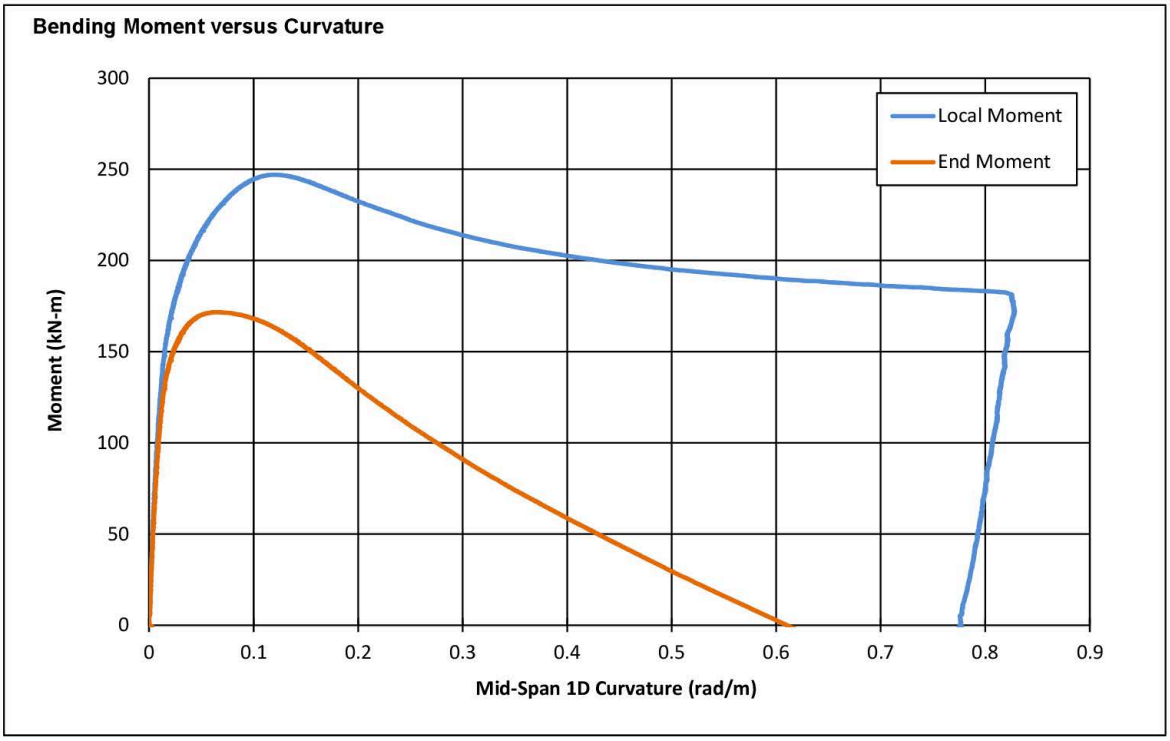

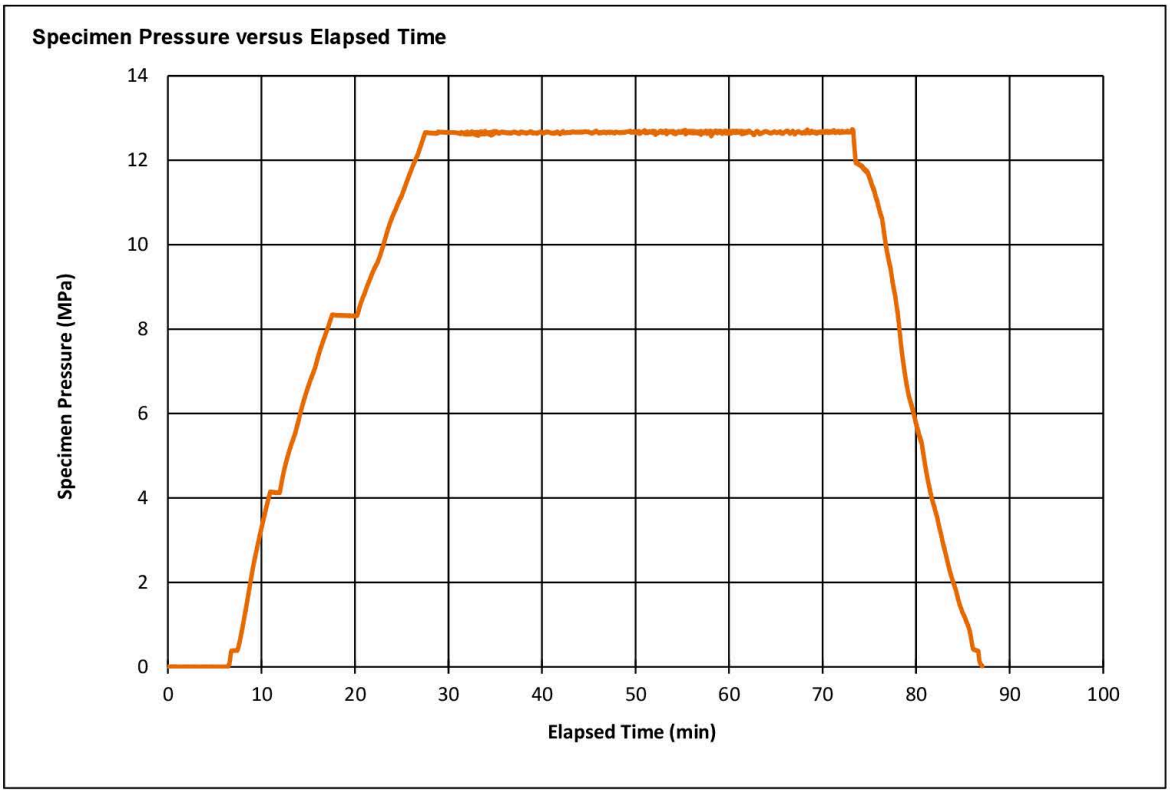

Compiled By:	Date:	Title:	C-FER Technologies
BCA	15-Mar-16	**Task 9.a Transition Weld Bend Test**	
Reviewed:	Date:	Specimen Identification:	
CMJT	5-Apr-17	**9.a.ii (Transition 2)**	Page 2 of 8

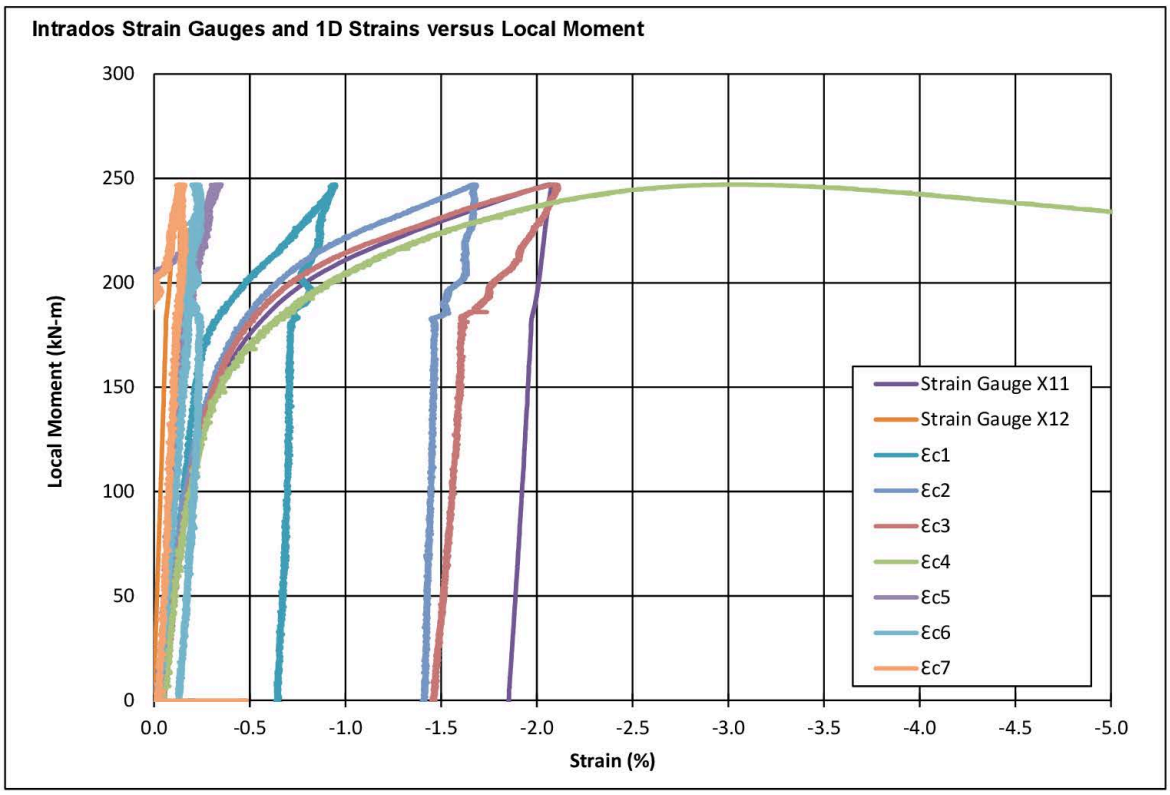

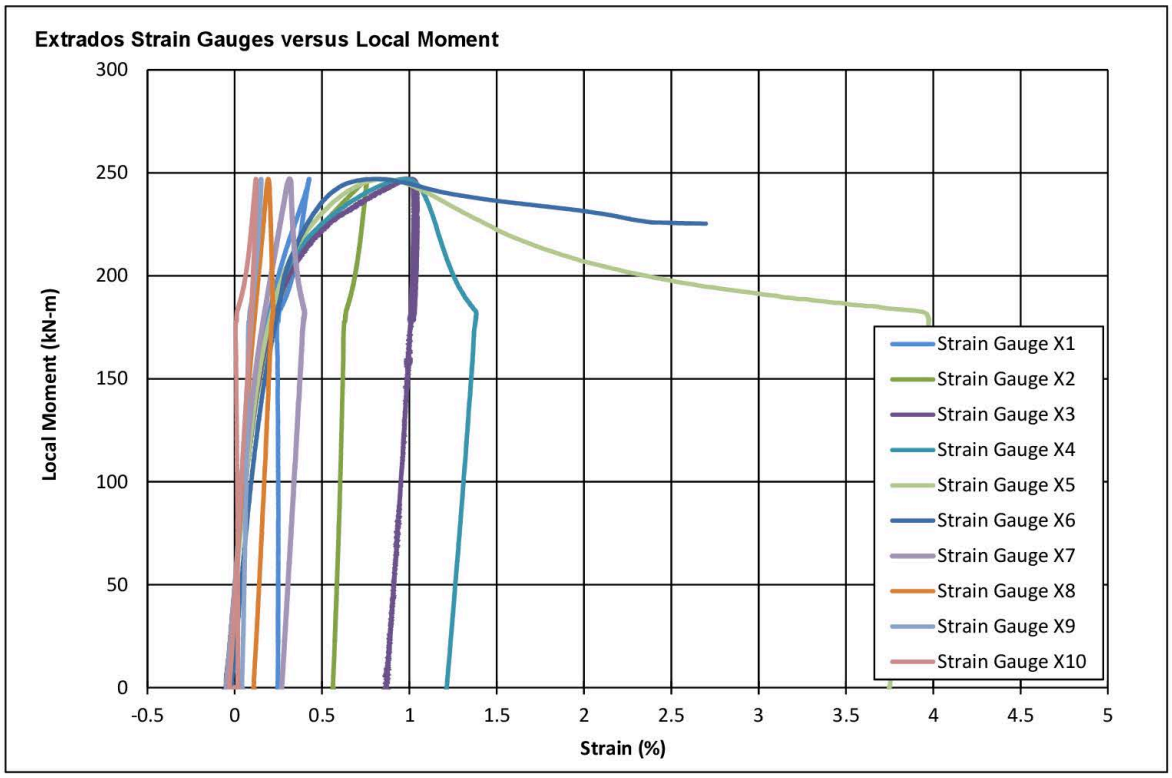

Compiled By:	Date:	Title:	C-FER Technologies
BCA	15-Mar-16	**Task 9.a Transition Weld Bend Test**	
Reviewed:	Date:	Specimen Identification:	Page 3 of 8
CMJT	5-Apr-17	**9.a.ii (Transition 2)**	

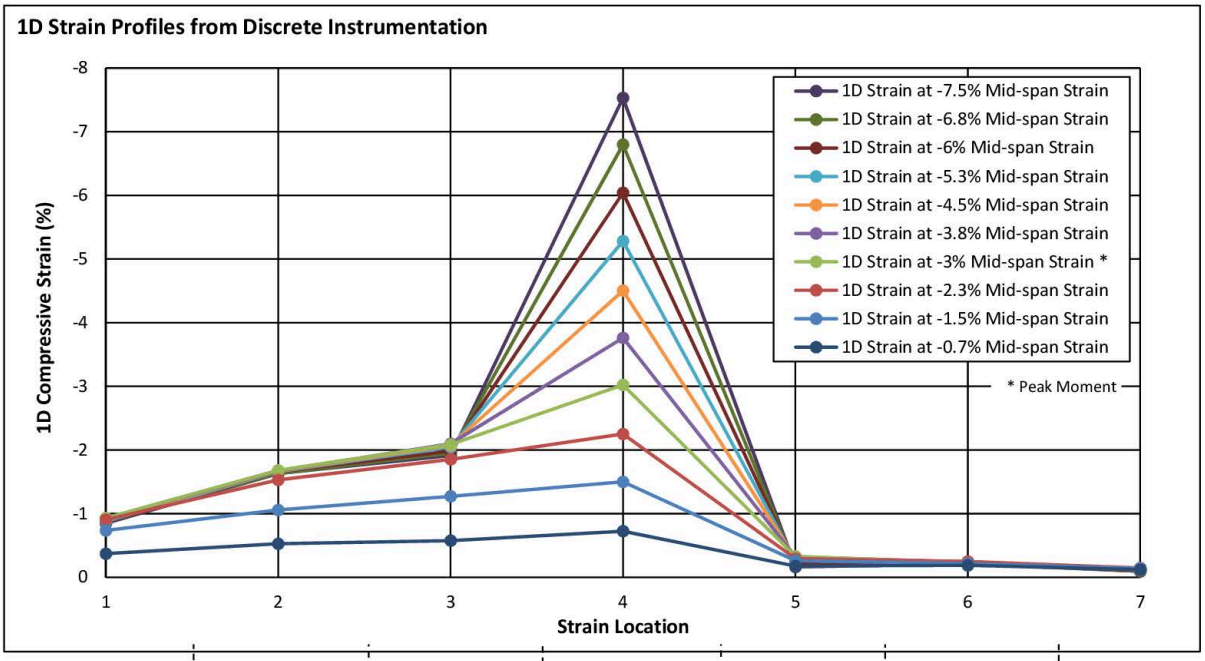

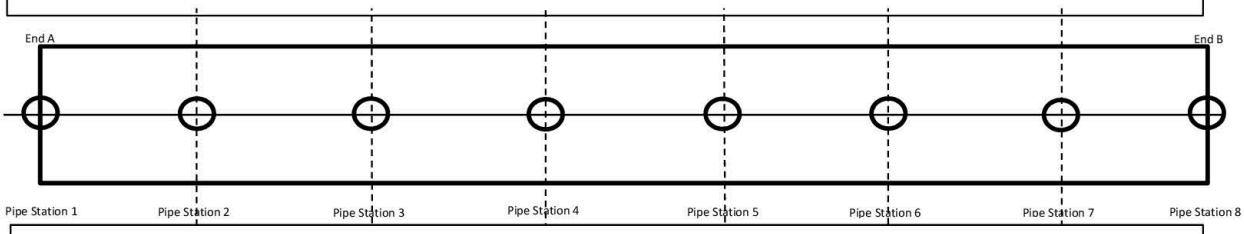

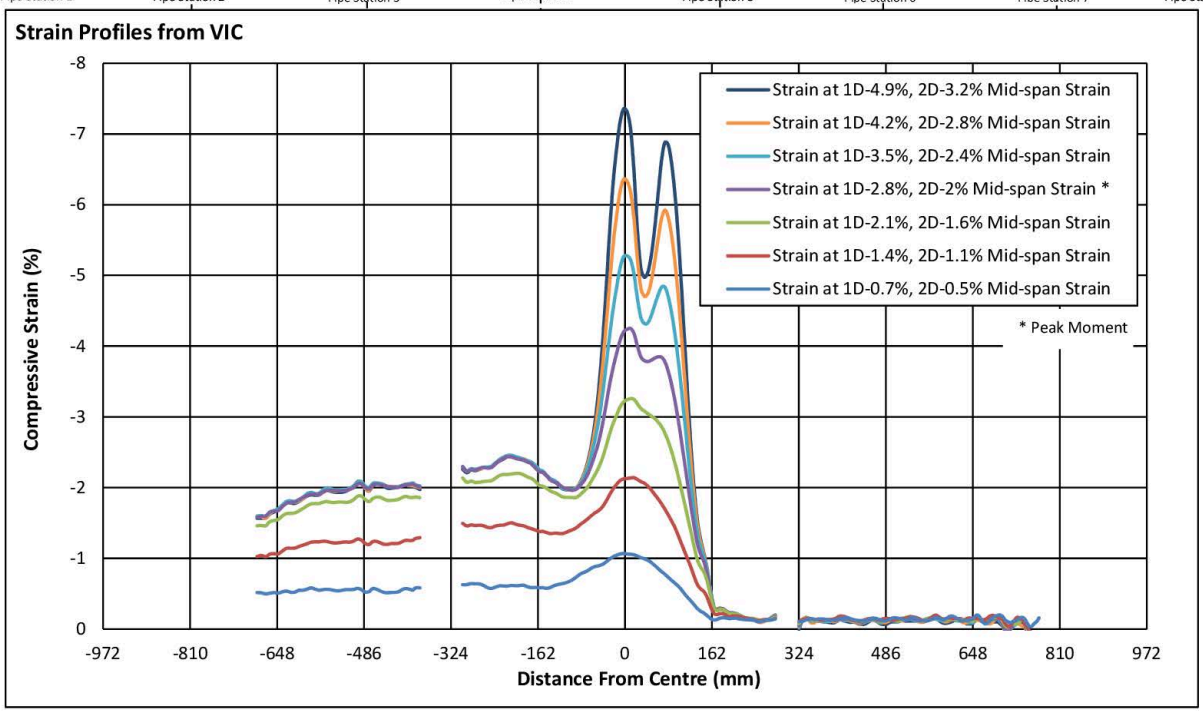

Compiled By:	Date:	Title:	C-FER Technologies
BCA	15-Mar-16	**Task 9.a Transition Weld Bend Test**	
Reviewed:	Date:	Specimen Identification:	Page 4 of 8
CMJT	5-Apr-17	**9.a.ii (Transition 2)**	

Pipe Measurements

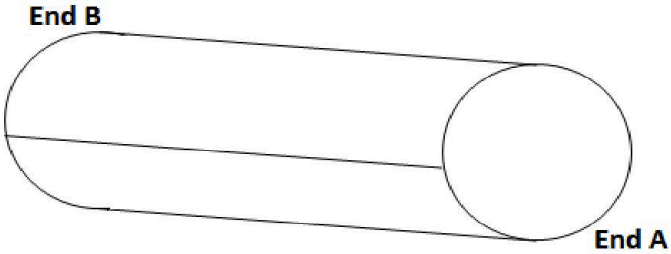

Pipe Specimen

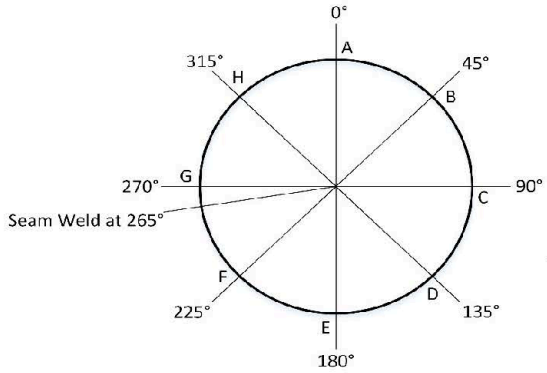

View from End A

Pre test Pup Lengths:

End A to 1	219	mm
1 to 2	324	mm
2 to 3	322	mm
3 to 4	326	mm
4 to 5	324	mm
5 to 6	324	mm
6 to 7	325	mm
7 to 8	324	mm
8 to End B	215	mm
Total Length	2 703	mm

Pre Test Pipe Lengths:

Position B	2 703	mm
Position D	2 705	mm
Position F	2 704	mm
Position H	2 702	mm
Average	2 704	mm

Circumferences:

End A measured circumference	1 020	mm
End B measured circumference	1 021	mm

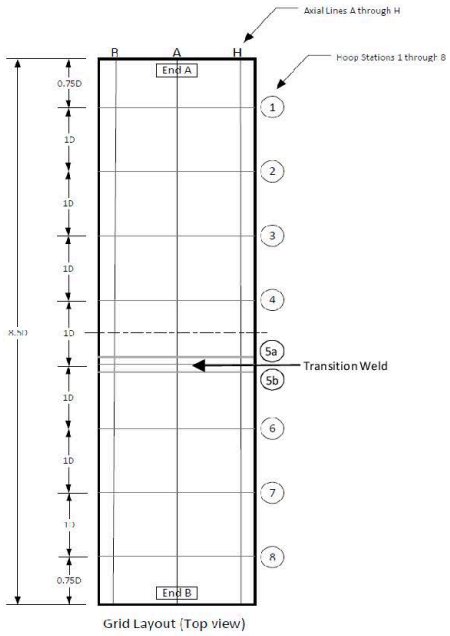

Measurement Grid

Note: Stations 5a and 5b were measured 51mm on either side of the center of the transition weld.

Measurements Taken By:	Date:	Title:	C-FER Technologies
PHB	22-Feb-16	**Task 9.a Transition Weld Bend Test**	
Measurements Approved By:	Date:	Specimen Identification:	Page 5 of 8
JHB	22-Feb-16	**9.a.ii (Transition 2)**	

Diameter Measurements

Micrometer:

Verification Rod 1	0.001	in
Verification Rod 2	0.001	in

Diameters in inches (as measured)

Station	Spanned Positions (in)			
	0° to 180°	45° to 225°	90° to 270°	135° to 315°
1	12.786	12.773	12.734	12.769
2	12.792	12.739	12.722	12.789
3	12.789	12.723	12.710	12.798
4	12.790	12.738	12.714	12.778
5a	12.794	12.753	12.712	12.759
5b	12.735	12.744	12.745	12.741
6	12.742	12.741	12.745	12.743
7	12.744	12.741	12.751	12.752
8	12.743	12.750	12.755	12.750

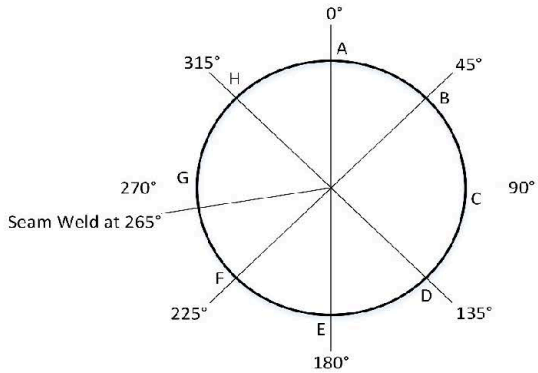

View from End A

Diameters in millimeters (converted)

Station	Spanned Positions (mm)			
	0° to 180°	45° to 225°	90° to 270°	135° to 315°
1	324.76	324.43	323.44	324.33
2	324.92	323.57	323.14	324.84
3	324.84	323.16	322.83	325.07
4	324.87	323.55	322.94	324.56
5a	324.97	323.93	322.88	324.08
5b	323.47	323.70	323.72	323.62
6	323.65	323.62	323.72	323.67
7	323.70	323.62	323.88	323.90
8	323.67	323.85	323.98	323.85

Station	Max. OD (mm)	@ Position	Min. OD (mm)	@ Position	Average OD (mm)	Standard Deviation (mm)	Ovality* (%)	Ovality incl. angle (°)
1	324.76	0	323.44	90	324.24	0.56	0.41	90
2	324.92	0	323.14	90	324.12	0.90	0.55	90
3	325.07	135	322.83	90	323.98	1.14	0.69	45
4	324.87	0	322.94	90	323.98	0.89	0.60	90
5a	324.97	0	322.88	90	323.96	0.85	0.64	90
5b	323.72	90	323.47	0	323.63	0.11	0.08	90
6	323.72	90	323.62	45	323.67	0.04	0.03	45
7	323.90	135	323.62	45	323.77	0.14	0.09	90
8	323.98	90	323.67	0	323.84	0.13	0.09	90

$$* \quad Ovality = \frac{(D_{max} - D_{min})}{(D_{nom})} * 100\%$$

Measurements Taken By:	Date:	Title:	C-FER Technologies
PHB	22-Feb-16	**Task 9.a Transition Weld Bend Test**	
Measurements Approved By:	Date:	Specimen Identification:	Page 6 of 8
JHB	22-Feb-16	**9.a.ii (Transition 2)**	

Wall Thickness Measurements

Micrometer Measurements
Pipe Ring Verification

End A
F141009 - CP3 - 9AII

	Micrometer (mm)	Ultrasonic probe (mm)
End A - Position B	6.310	6.29
End A - Position D	6.283	6.26
End A - Position F	6.160	6.14
End A - Position H	6.165	6.15
End B - Position B	6.154	6.15
End B - Position D	6.341	6.35
End B - Position F	6.259	6.23
End B - Position H	6.396	6.38

End B
F141009 - EV - 22333 - 2 - 9AI - TR

	Micrometer (mm)	Ultrasonic probe (mm)
End A - Position B	9.483	9.48
End A - Position D	9.506	9.50
End A - Position F	9.446	9.47
End A - Position H	9.404	9.41
End B - Position B	9.501	9.50
End B - Position D	9.492	9.51
End B - Position F	9.506	9.52
End B - Position H	9.448	9.45

Micrometer ID:

Mitutoyo 0-1"
1": 1.00005" Calibration

Ultrasonic Probe ID:
Dakota Ultrasonics MVX

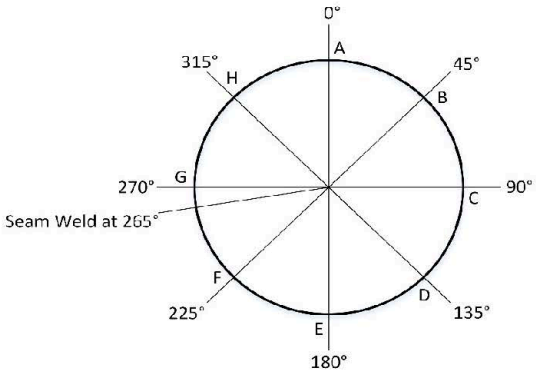

View from End A

Ultrasonic Measurements

Station	Circumferential Position							
	A	B	C	D	E	F	G	H
	Wall Thickness (mm)							
1	6.41	6.46	6.55	6.45	6.42	6.48	6.89	6.42
2	6.39	6.45	6.48	6.44	6.42	6.47	6.96	6.46
3	6.37	6.46	6.52	6.41	6.42	6.45	7.03	6.37
4	6.38	6.46	6.52	6.43	6.44	6.44	7.01	6.37
5a	6.33	6.43	6.53	6.37	6.44	6.44	6.54	6.42
5b	9.39	9.47	9.42	9.43	9.44	9.45	9.63	9.46
6	9.46	9.47	9.45	9.47	9.41	9.48	9.84	9.45
7	9.52	9.50	9.50	9.52	9.44	9.47	9.80	9.42
8	9.39	9.45	9.46	9.45	9.40	9.44	9.62	9.46

	End A	End B
Average	6.49 mm	9.49 mm
Std. dev	0.17 mm	0.10 mm

Measurements Taken By:	Date:	Title:	C-FER Technologies
PHB	22-Feb-16	Task 9.a Transition Weld Bend Test	
Measurements Approved By:	Date:	Specimen Identification:	Page 7 of 8
JHB	22-Feb-16	9.a.ii (Transition 2)	

Instrumentation Layout

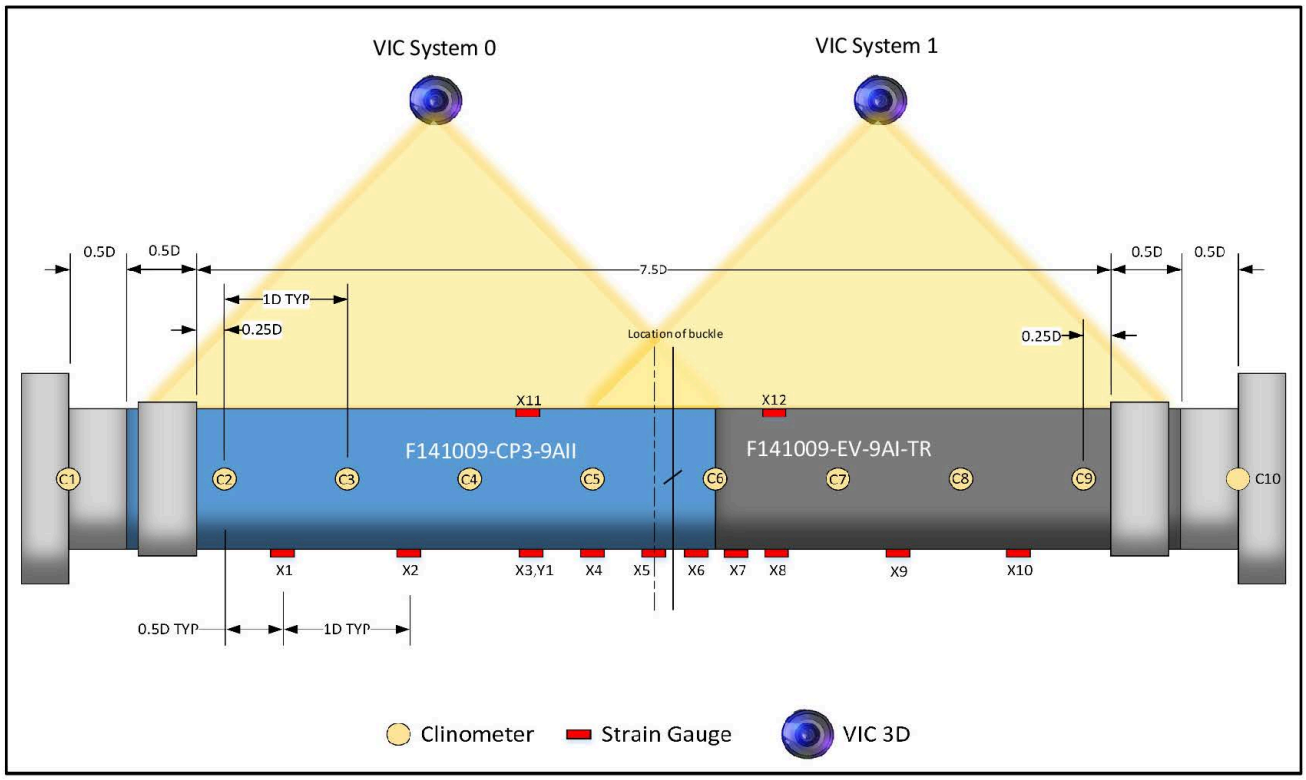

Anomaly - Transition Weld 6.35mm to 6.53mm nominal wt pipe

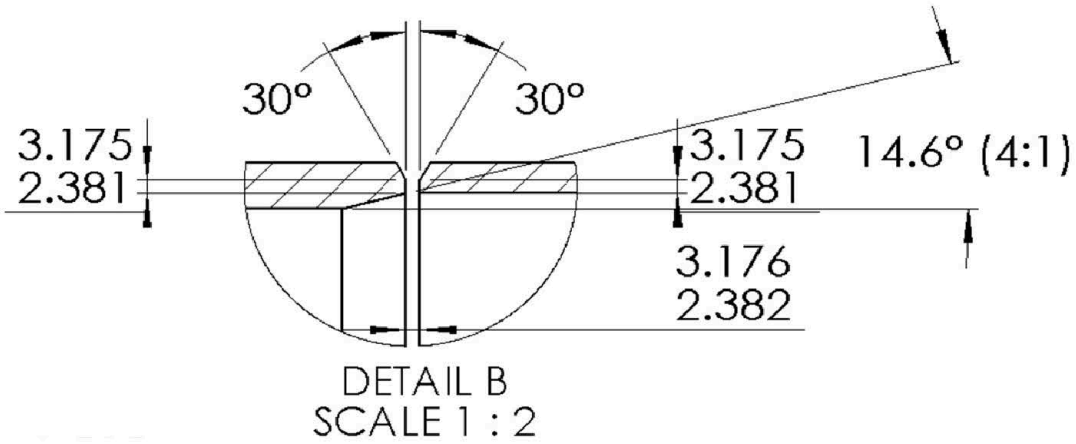

Drawing Done By:	Date:	Title:	C-FER Technologies
BCA	15-Mar-16	**Task 9.a Transition Weld Bend Test**	
Drawing Approved By:	Date:	Specimen Identification:	Page 8 of 8
CMJT	5-Apr-17	**9.a.ii (Transition 2)**	

Task 9.a Transition Weld Bend Test

Specimen Identification:	**9.a.iii (Transition 3)**	C-FER Test Summary:	**Rev. 1, June 23, 2017**
C-FER Specimen Number (End A):	**X65-ERW-1-3-9AIII**	Test Date:	**February 18, 2016**
C-FER Specimen Number (End B):	**X65-ERW-2-9AIII**		

Nominal Pipe Characteristics

	End A	End B
Nominal OD (mm) =	323.85	323.85
Average OD (mm) =	324.03	323.76
Nominal Wall Thickness (mm) =	6.35	9.53
Average Wall Thickness (mm) =	6.43	9.57
Specimen Length (mm) =	1517	1190
Length/OD =	4.7	3.7
SMYS (MPa) =	448	359

Test Loading Procedure

1. The specimen was pressurized to 72% SMYS while applying compressive force to compensate for the end cap load.
2. The specimen was bent to the maximum displacement possible within the test frame.

Test Parameters

Target Net Pressure (MPa) =	12.65
Test Average Net Pressure (MPa) =	12.66

Test Results

Peak End Moment (kN-m) =	184
Peak Local Moment* (kN-m) =	265

Strains Across Buckle at Peak Moment

1D Strain - Discrete (%) =	-1.8
1D Strain Centered on Buckle - VIC (%) =	-3.0
2D Strain Centered on Buckle - VIC (%) =	-2.4
0.5D Strain from Buckle towards End A - VIC (%) =	-3.3
1D Strain from Buckle towards End A - VIC (%) =	-3.2

Anomaly - Transition Weld

Girth weld transition
6.35mm to 9.53mm

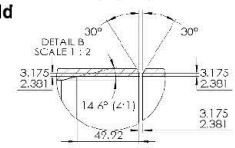

Failure Mode

Outward buckle approximately 50mm from specimen midpoint

*Local Moment taken at specimen midpoint

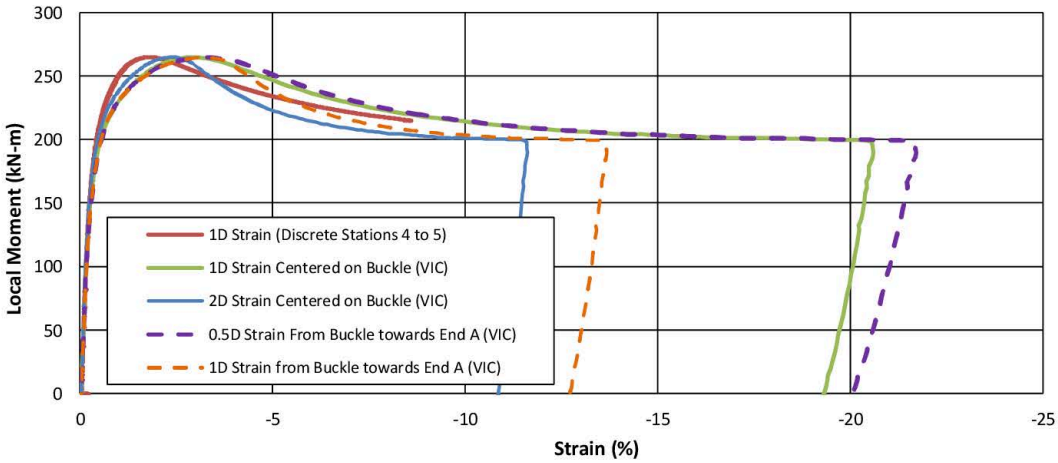

General Comments:

Calculation of discrete compressive strain beyond -8.6% was hindered by the failure of the extrados strain gauge nearest to the buckle (X5).

Post Test:

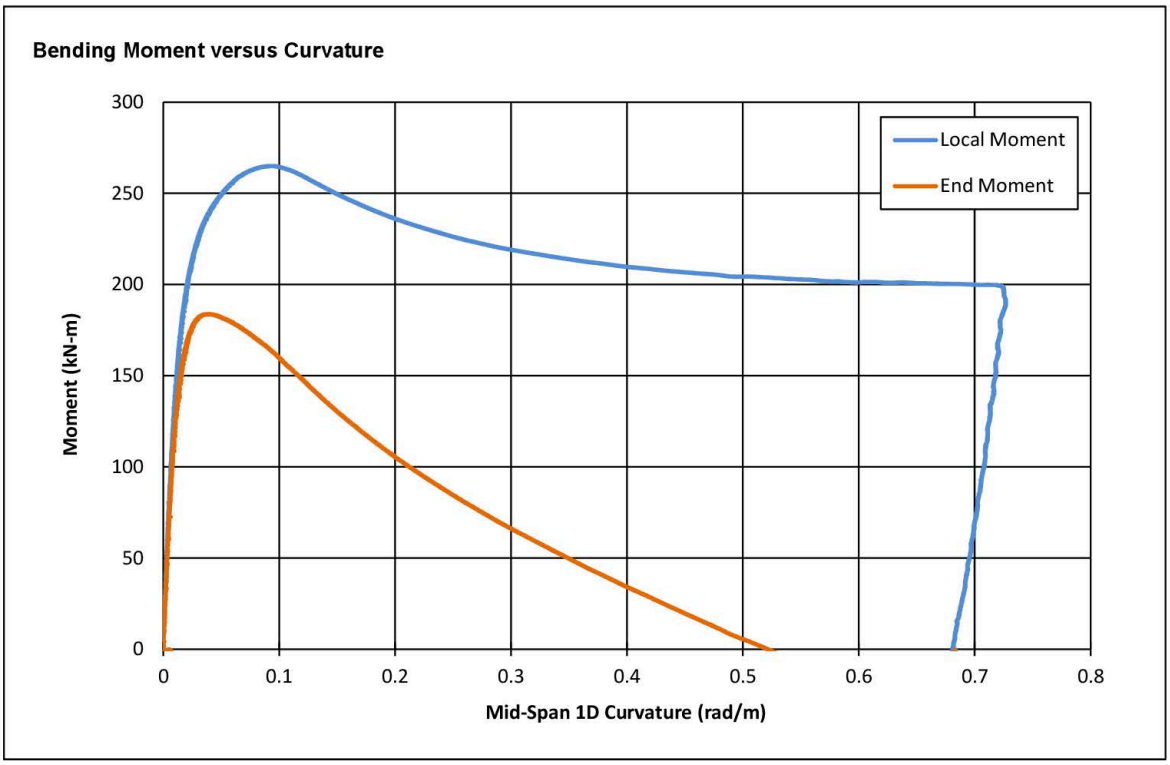

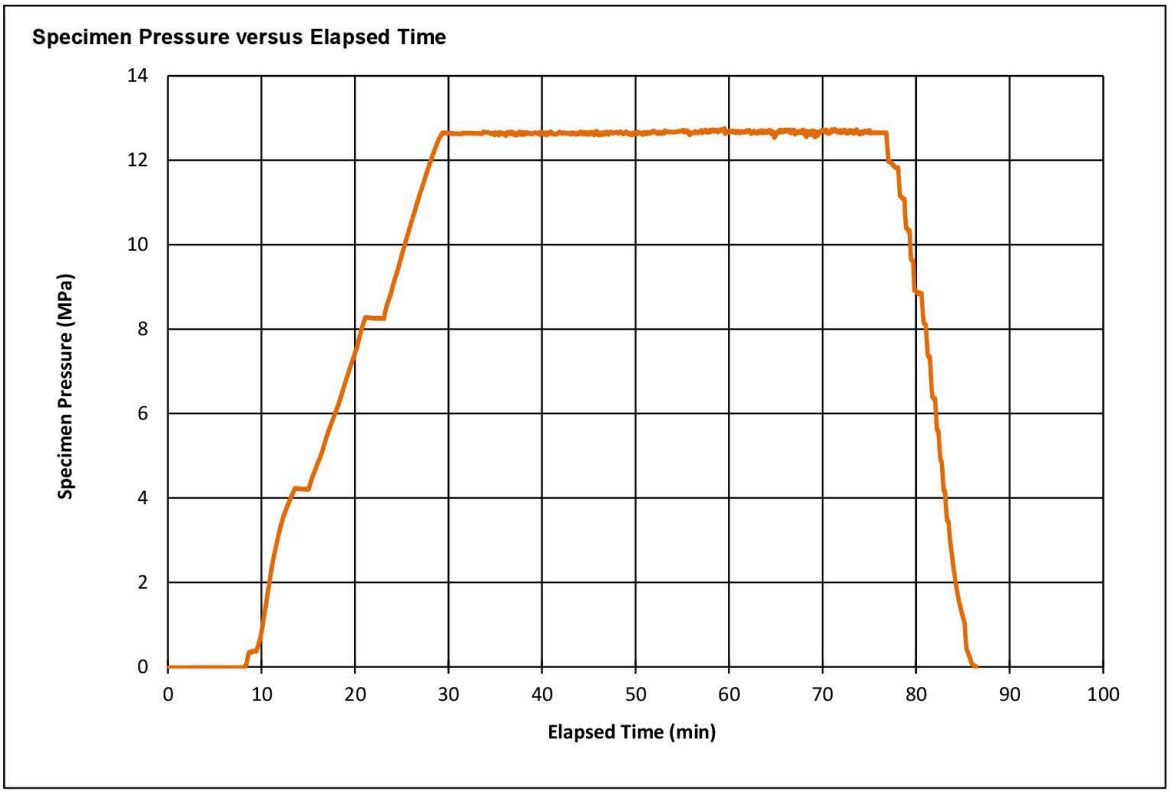

Compiled By:	Date:	Title:	C-FER Technologies
BCA	15-Mar-16	**Task 9.a Transition Weld Bend Test**	
Reviewed:	Date:	Specimen Identification:	
CMJT	5-Apr-17	**9.a.iii (Transition 3)**	Page 2 of 8

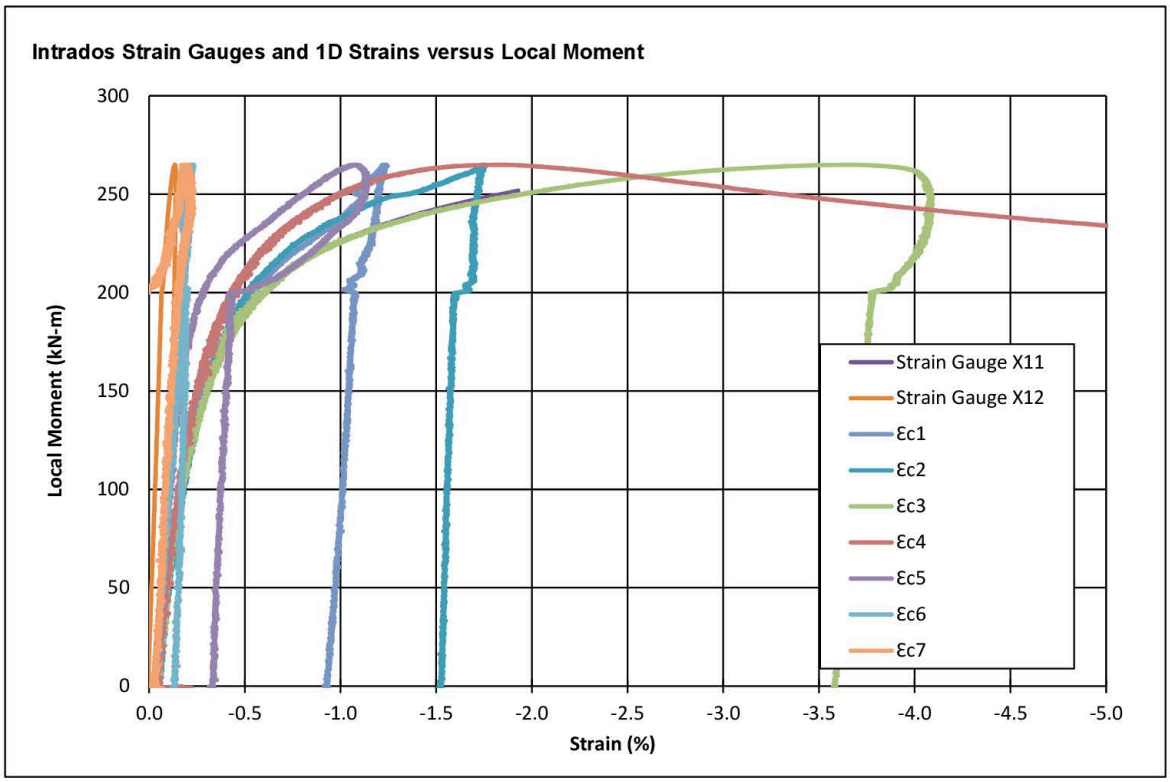

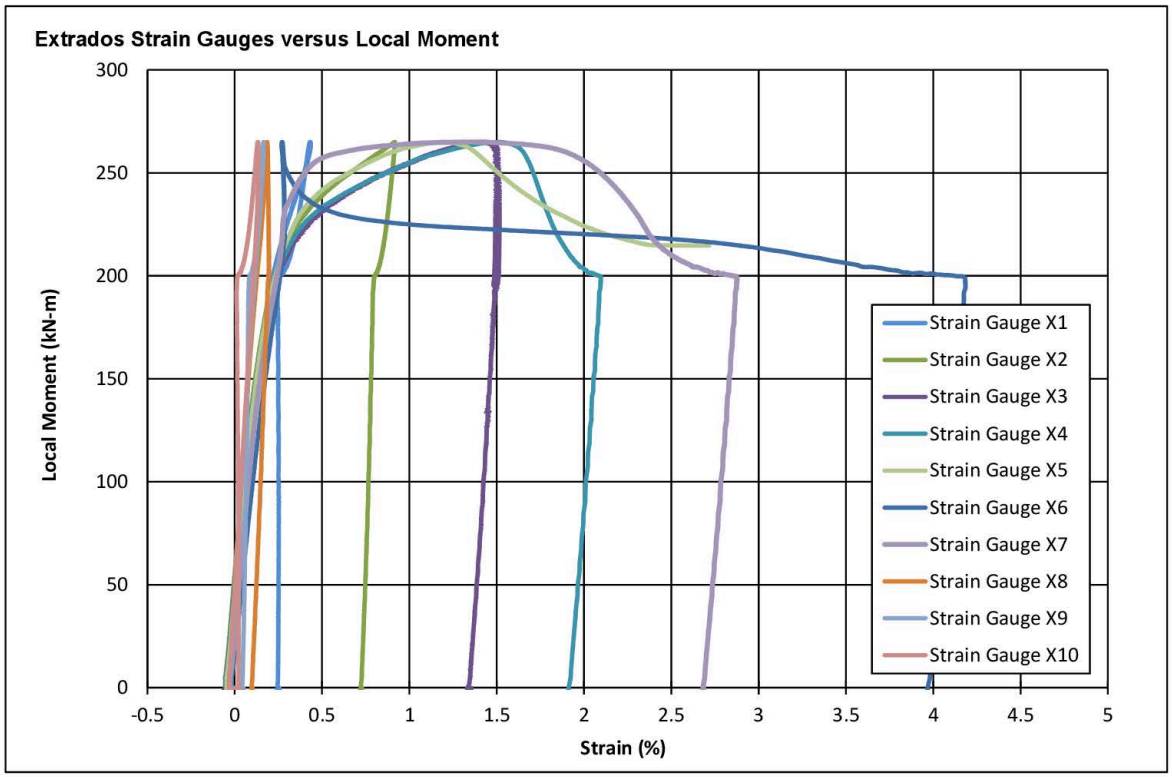

Compiled By:	Date:	Title:	C-FER Technologies
BCA	15-Mar-16	**Task 9.a Transition Weld Bend Test**	
Reviewed:	Date:	Specimen Identification:	
CMJT	5-Apr-17	**9.a.iii (Transition 3)**	Page 3 of 8

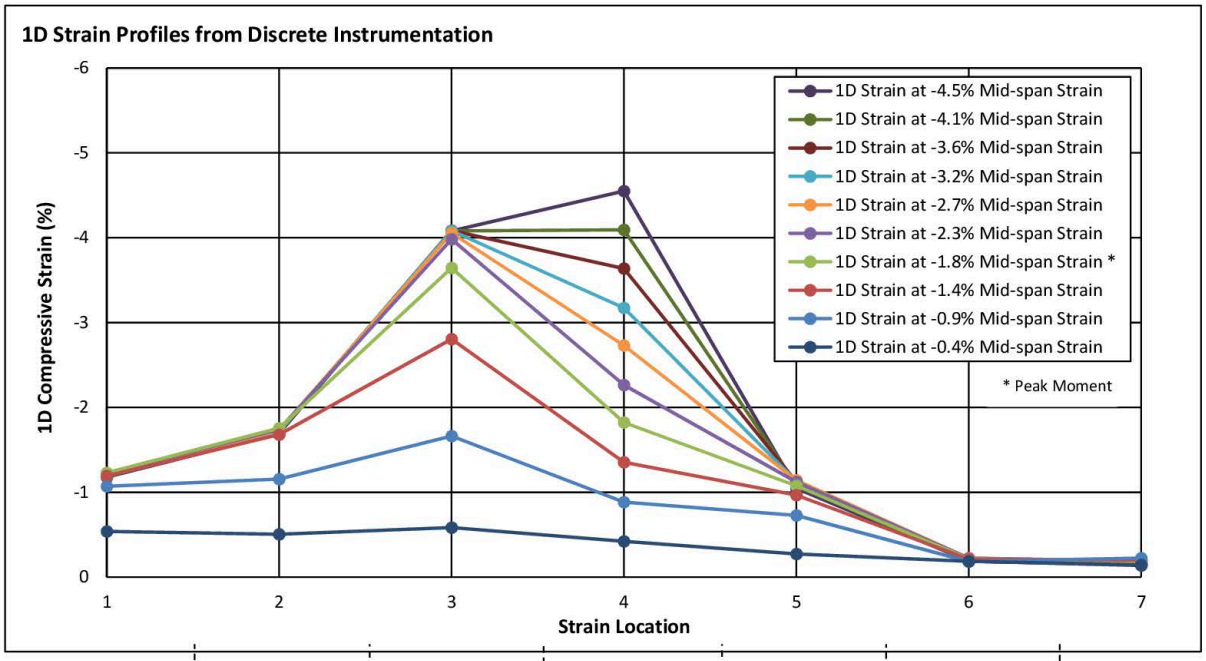

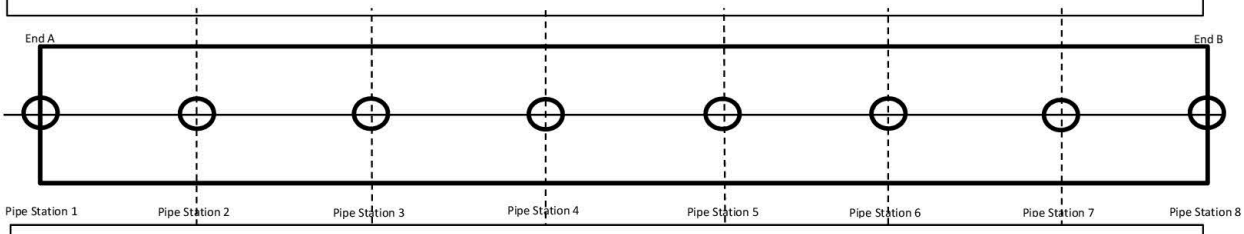

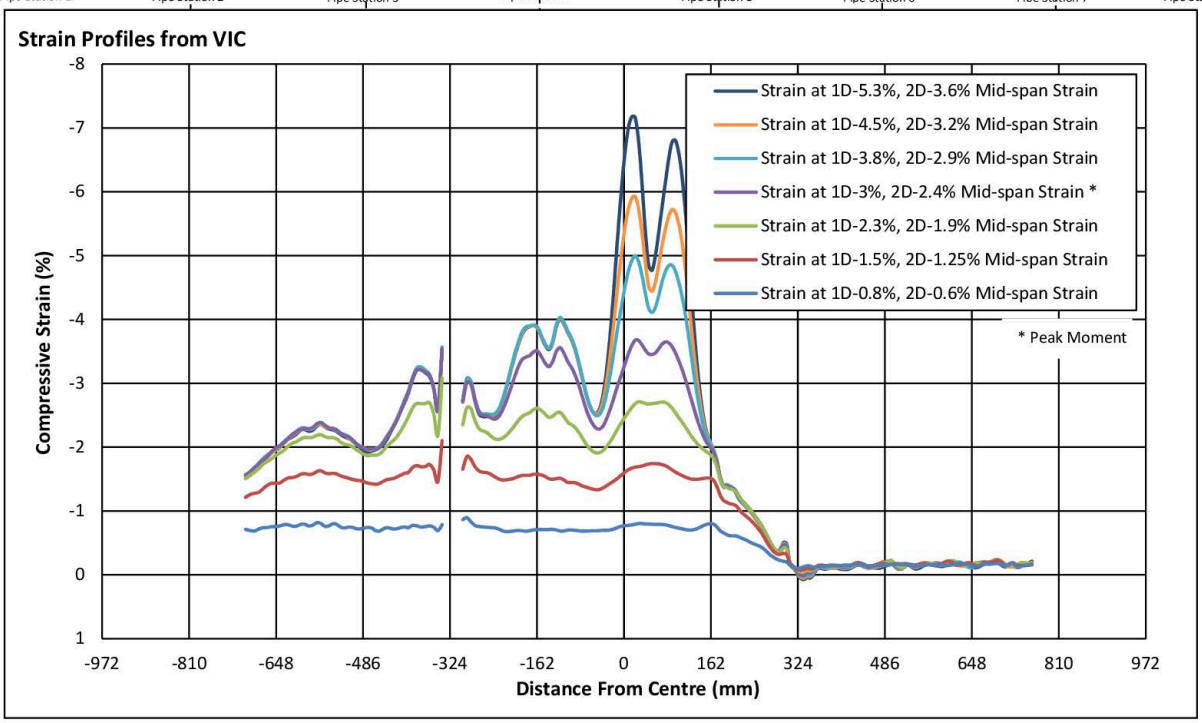

Compiled By:	Date:	Title:	C-FER Technologies
BCA	15-Mar-16	**Task 9.a Transition Weld Bend Test**	
Reviewed:	Date:	Specimen Identification:	Page 4 of 8
CMJT	5-Apr-17	**9.a.iii (Transition 3)**	

Pipe Measurements

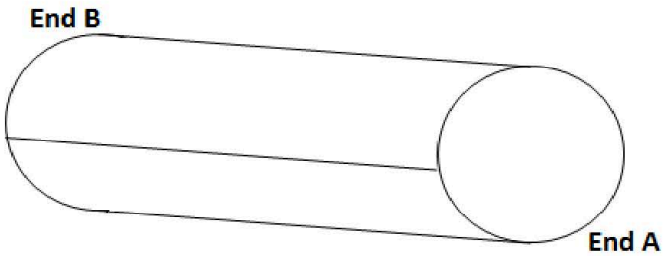

Pipe Specimen

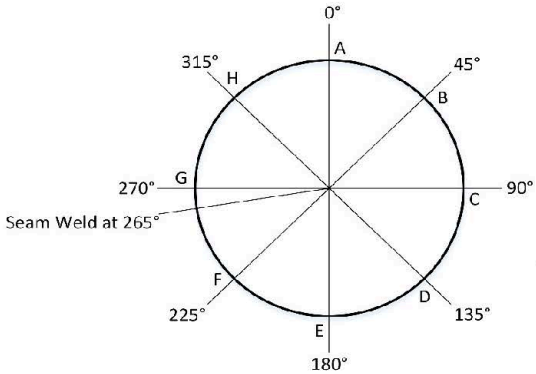

Pre test Pup Lengths:

End A to 1	220	mm
1 to 2	324	mm
2 to 3	324	mm
3 to 4	325	mm
4 to 5	324	mm
5 to 6	323	mm
6 to 7	324	mm
7 to 8	323	mm
8 to End B	220	mm
Total Length	2 707	mm

Pre Test Pipe Lengths:

Position B	2 707	mm
Position D	2 706	mm
Position F	2 707	mm
Position H	2 708	mm
Average	2 707	mm

Circumferences:

End A measured circumference	1 020	mm
End B measured circumference	1 021	mm

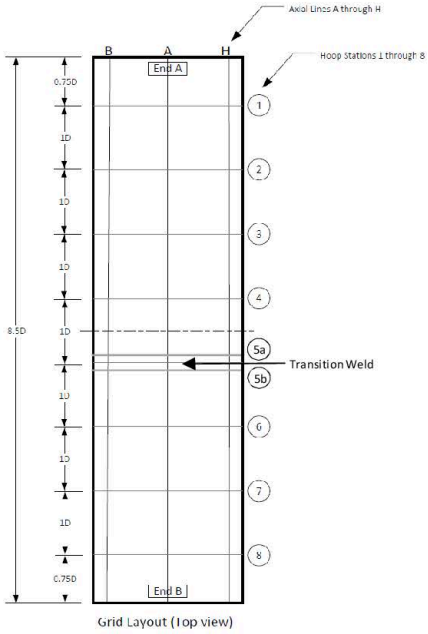

Measurement Grid

Note: Stations 5a and 5b were measured 51mm on either side of the center of the transition weld.

Measurements Taken By:	Date:	Title:	C-FER Technologies
PHB	8-Feb-16	**Task 9.a Transition Weld Bend Test**	
Measurements Approved By:	Date:	Specimen Identification:	Page 5 of 8
BCA	10-Feb-16	**9.a.iii (Transition 3)**	

Diameter Measurements

Micrometer:

Verification Rod 1	0.001	in
Verification Rod 2	0.001	in

Diameters in inches (as measured)

Station	Spanned Positions (in)			
	0° to 180°	45° to 225°	90° to 270°	135° to 315°
1	12.766	12.796	12.713	12.738
2	12.791	12.811	12.710	12.726
3	12.804	12.797	12.725	12.757
4	12.789	12.793	12.719	12.744
5a	12.747	12.773	12.714	12.727
5b	12.738	12.727	12.739	12.730
6	12.749	12.746	12.755	12.749
7	12.750	12.743	12.759	12.757
8	12.748	12.744	12.754	12.757

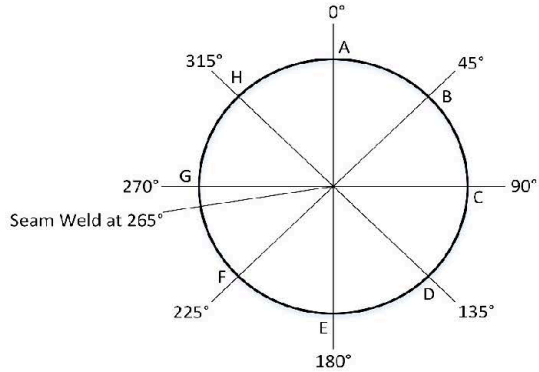

View from End A

Diameters in millimeters (converted)

Station	Spanned Positions (mm)			
	0° to 180°	45° to 225°	90° to 270°	135° to 315°
1	324.26	325.02	322.91	323.55
2	324.89	325.40	322.83	323.24
3	325.22	325.04	323.22	324.03
4	324.84	324.94	323.06	323.70
5a	323.77	324.43	322.94	323.27
5b	323.55	323.27	323.57	323.34
6	323.82	323.75	323.98	323.82
7	323.85	323.67	324.08	324.03
8	323.80	323.70	323.95	324.03

Station	Max. OD (mm)	@ Position	Min. OD (mm)	@ Position	Average OD (mm)	Standard Deviation (mm)	Ovality* (%)	Ovality incl. angle (°)
1	325.02	45	322.91	90	323.93	0.91	0.65	45
2	325.40	45	322.83	90	324.09	1.25	0.79	45
3	325.22	0	323.22	90	324.38	0.94	0.62	90
4	324.94	45	323.06	90	324.14	0.91	0.58	45
5a	324.43	45	322.94	90	323.60	0.65	0.46	45
5b	323.57	90	323.27	45	323.43	0.15	0.09	45
6	323.98	90	323.75	45	323.84	0.10	0.07	45
7	324.08	90	323.67	45	323.91	0.18	0.13	45
8	324.03	135	323.70	45	323.87	0.15	0.10	90

$$^{*}\ Ovality = \frac{(D_{\max} - D_{\min})}{(D_{nom})} * 100\%$$

Measurements Taken By:	Date:	Title:	C-FER Technologies
PHB	8-Feb-16	**Task 9.a Transition Weld Bend Test**	
Measurements Approved By:	Date:	Specimen Identification:	Page 6 of 8
BCA	10-Feb-16	**9.a.iii (Transition 3)**	

Wall Thickness Measurements

Micrometer Measurements
Pipe Ring Verification

End A
F141009 - CP3 - 9AIII

	Micrometer (mm)	Ultrasonic probe (mm)
End A - Position B	6.413	6.39
End A - Position D	6.434	6.42
End A - Position F	6.330	6.35
End A - Position H	6.416	6.41
End B - Position B	6.353	6.37
End B - Position D	6.363	6.35
End B - Position F	6.377	6.40
End B - Position H	6.405	6.38

End B
F141009 - EV - 22333 - 9AIII - TR

	Micrometer (mm)	Ultrasonic probe (mm)
End A - Position B	9.420	9.41
End A - Position D	9.390	9.37
End A - Position F	9.458	9.48
End A - Position H	9.415	9.41
End B - Position B	9.410	9.39
End B - Position D	9.421	9.44
End B - Position F	9.430	9.41
End B - Position H	9.407	9.41

Micrometer ID:

Mitutoyo 0-1"
1": 1.00005" Calibration

Ultrasonic Probe ID:
Dakota Ultrasonics MVX

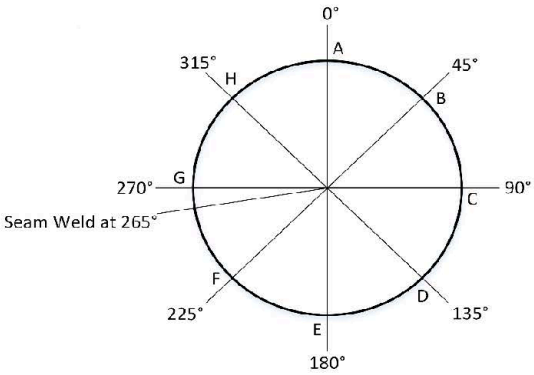

View from End A

Ultrasonic Measurements

Station	Circumferential Position							
	A	B	C	D	E	F	G	H
	Wall Thickness (mm)							
1	6.430	6.400	6.510	6.450	6.380	6.400	6.410	6.460
2	6.410	6.380	6.500	6.420	6.370	6.380	6.430	6.440
3	6.420	6.390	6.500	6.440	6.360	6.380	6.420	6.450
4	6.430	6.410	6.510	6.470	6.390	6.400	6.480	6.430
5a	6.380	6.390	6.530	6.460	6.370	6.330	6.560	6.430
5b	6.210	6.190	6.490	6.440	6.140	6.180	6.230	6.200
6	9.520	9.480	9.490	9.550	9.460	9.450	9.920	9.460
7	9.510	9.480	9.510	9.550	9.450	9.530	10.050	9.480
8	9.560	9.510	9.540	9.580	9.490	9.540	10.020	9.520

	End A	End B (excluding 5b)
Average	6.43 mm	9.57 mm
Std. dev	0.05 mm	0.17 mm

Note: 5b wall thickness measurements were taken on the back bevel of the counterbore weld.

Measurements Taken By:	Date:	Title:	C-FER Technologies
PHB	8-Feb-16	**Task 9.a Transition Weld Bend Test**	
Measurements Approved By:	Date:	Specimen Identification:	Page 7 of 8
BCA	10-Feb-16	**9.a.iii (Transition 3)**	

Instrumentation Layout

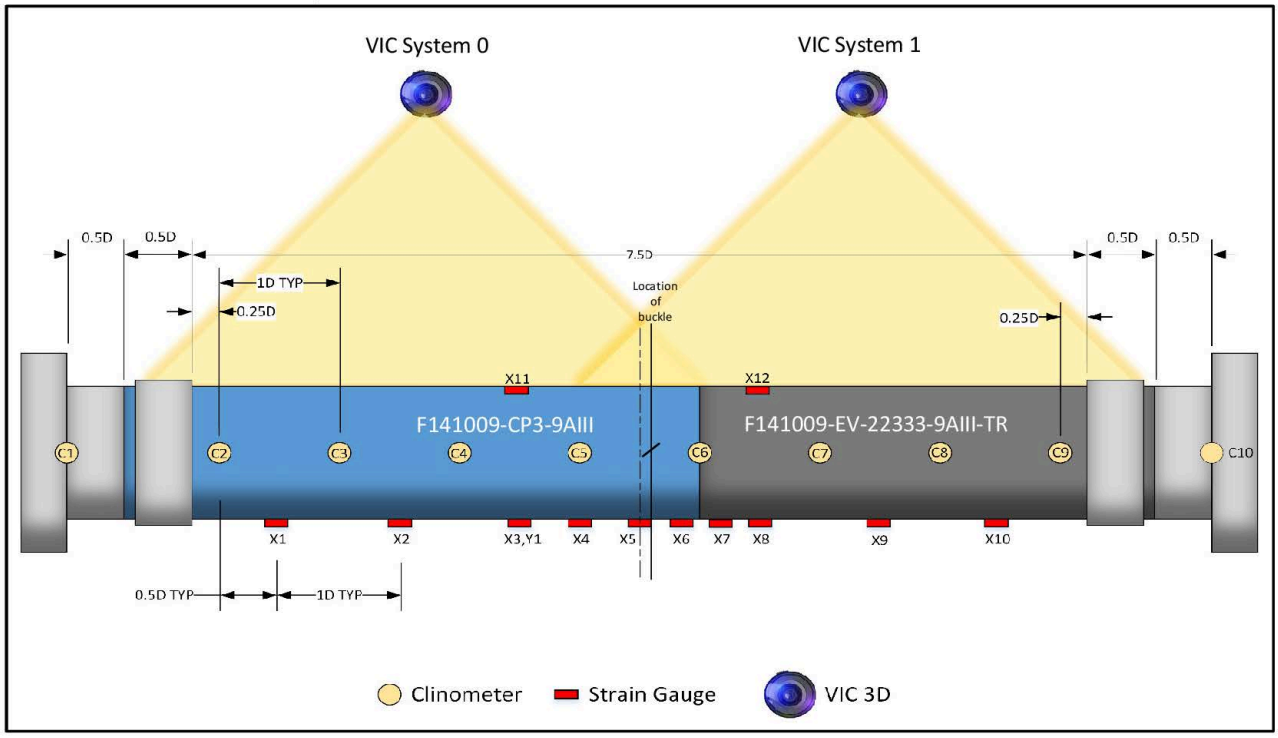

Anomaly - Transition Weld 6.35mm to 9.53mm nominal wt pipe

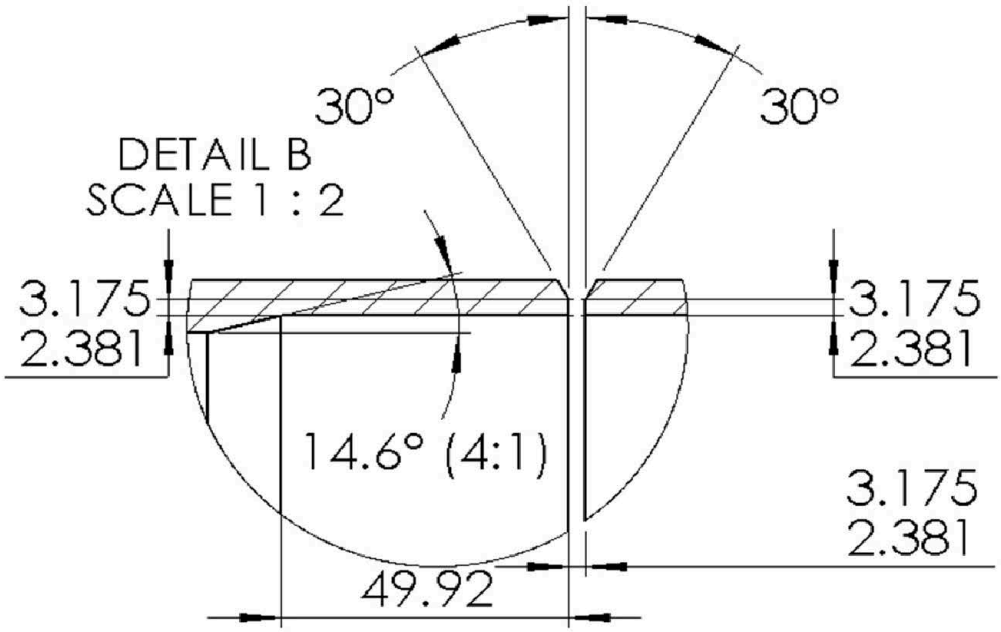

Drawing Done By:	Date:	Title:	C-FER Technologies
BCA	15-Mar-16	**Task 9.a Transition Weld Bend Test**	
Drawing Approved By:	Date:	Specimen Identification:	Page 8 of 8
CMJT	5-Apr-17	**9.a.iii (Transition 3)**	

Task 9.b Corrosion Bend Test

Specimen Identification:	**9.b.i (Corrosion 1)**	C-FER Test Summary:	**Rev. 2, June 23, 2017**
C-FER Specimen Number:	**X65-ERW-1-2-9BI**	Test Date:	**October 29, 2015**

Nominal Pipe Characteristics

Nominal OD (mm) =	323.85
Average OD (mm) =	323.87
Nominal Wall Thickness (mm) =	6.35
Average Wall Thickness (mm) =	6.38
Specimen Length (mm) =	2693
Length/OD =	8.3
SMYS (MPa) =	448

Test Loading Procedure

1. The specimen was pressurized to 72% SMYS while applying compressive force to compensate for the end cap load.
2. The specimen was bent to the maximum displacement possible within the test frame.

Test Parameters

Target Net Pressure (MPa) =	12.65
Test Average Net Pressure (MPa) =	12.65

Test Results

Peak End Moment (kN-m) =	171
Peak Local Moment* (kN-m) =	229

Strains Across Buckle at Peak Moment

1D Strain - Discrete (%) =	-1.7
1D Strain - VIC (%) =	-2.3
2D Strain - VIC (%) =	-1.5

Anomaly - Shallow Corrosion Patch

	Length	Width	Depth
Nominal Dimensions:	0.2D	0.2D	0.25t
Nominal Dimensions (mm):	64.8	64.8	1.59
Measured Dimensions (mm):	64.0	65.0	1.45

Failure Mode

Outward buckle formed at the specimen midpoint. A leak formed on the edge of the corrosion patch at a 1D strain of 14.1%

*Local Moment taken at specimen midpoint

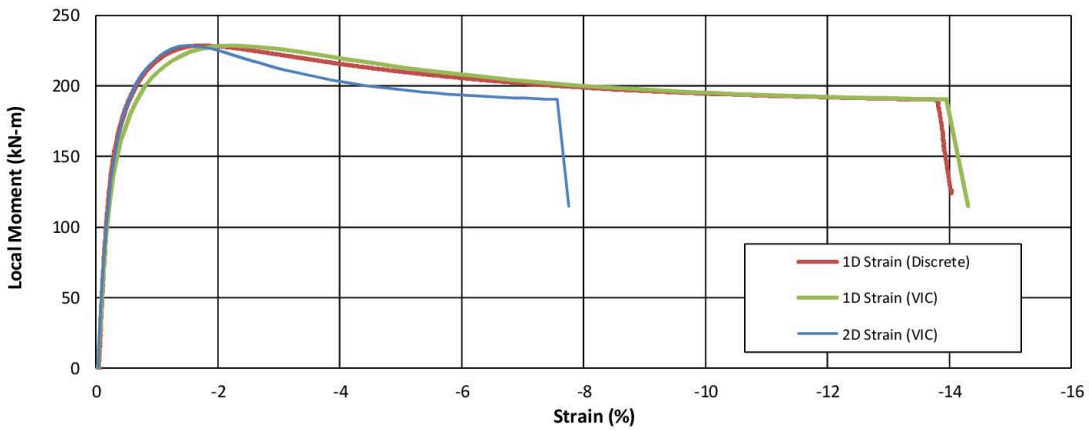

General Comments:

Post Test:

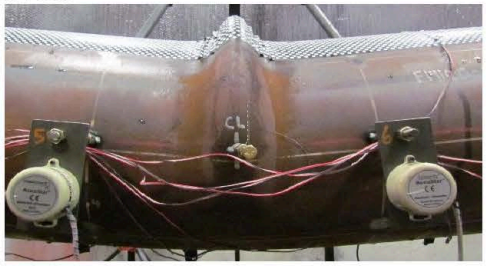

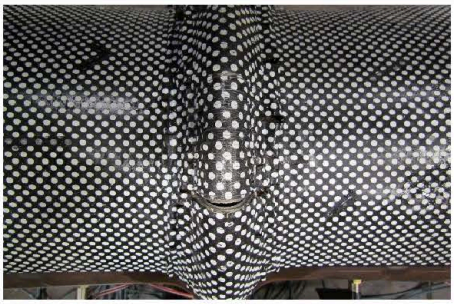

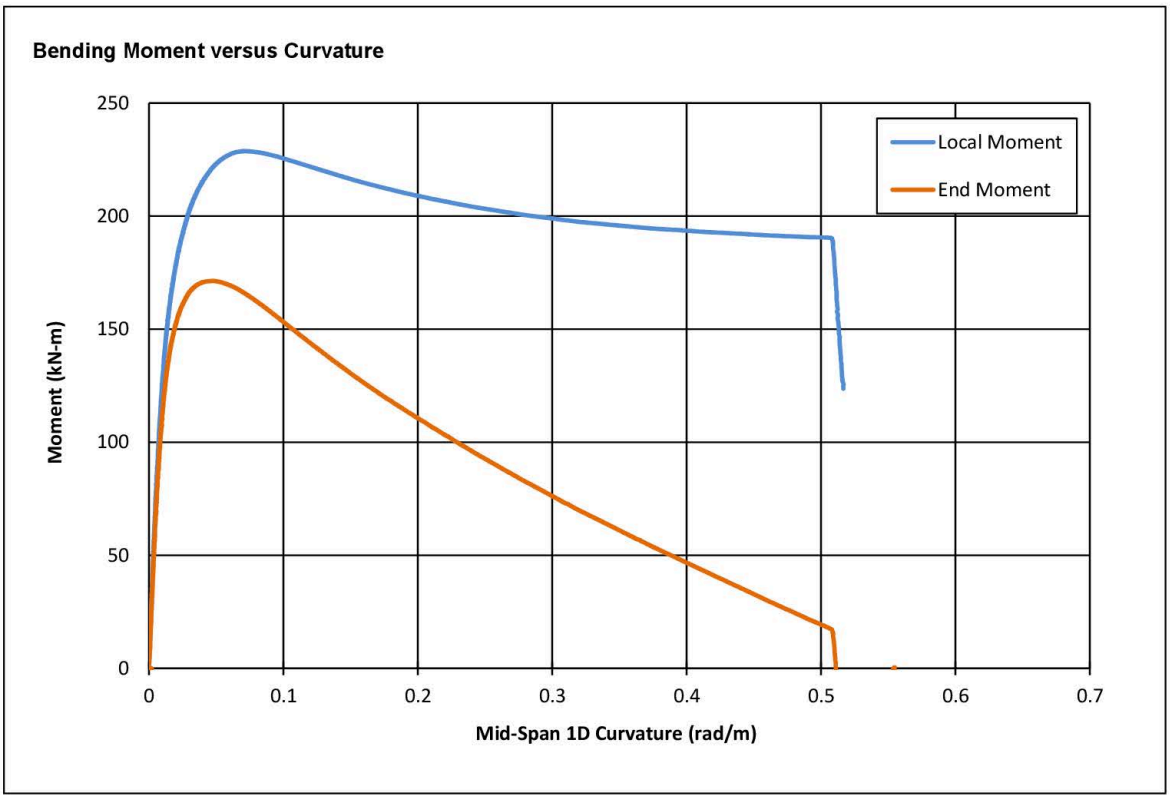

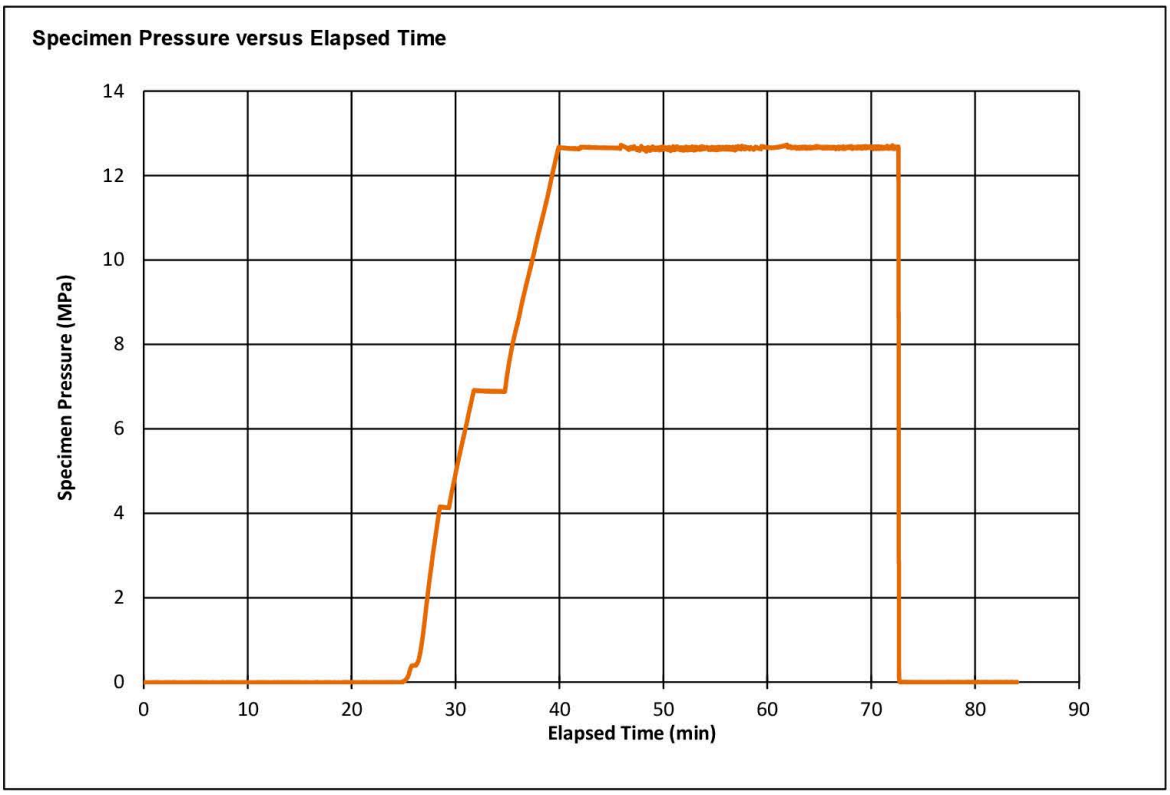

Compiled By:	Date:	Title:	C-FER Technologies
BCA	4-Feb-16	**Task 9.b Corrosion Bend Test**	
Reviewed:	Date:	Specimen Identification:	Page 2 of 8
CMJT	6-Apr-17	**9.b.i (Corrosion 1)**	

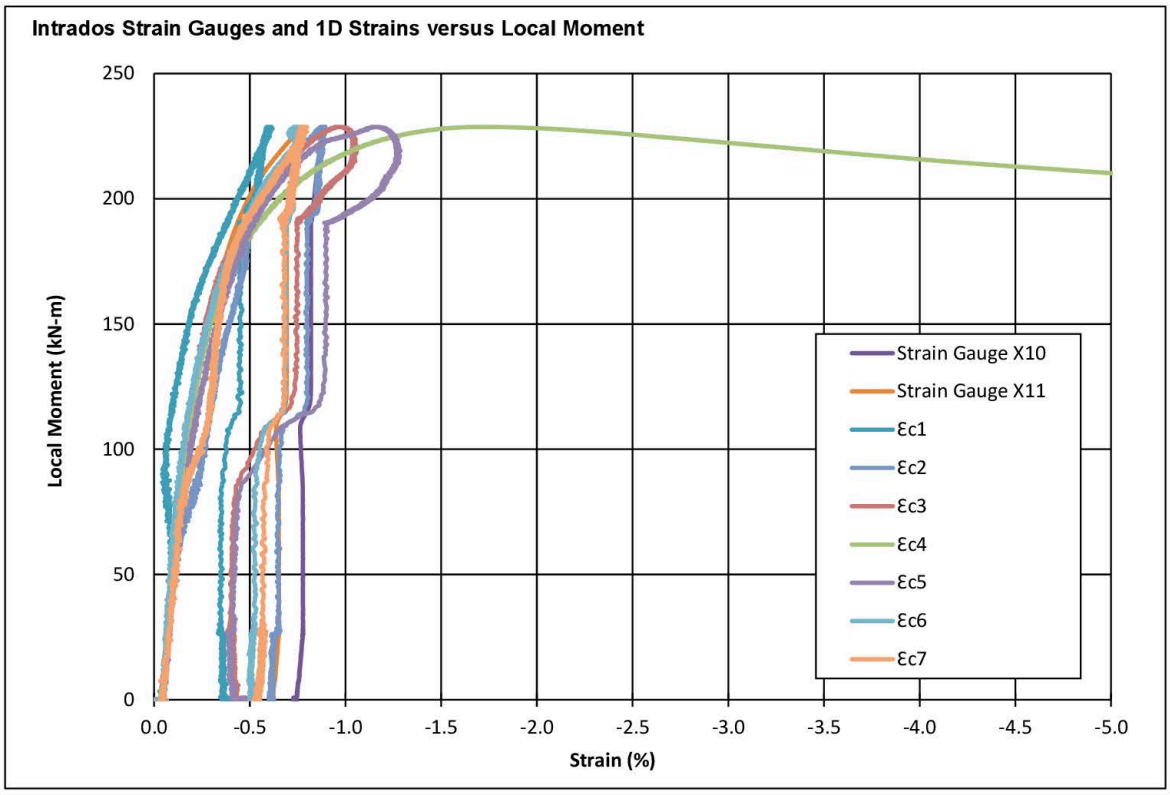

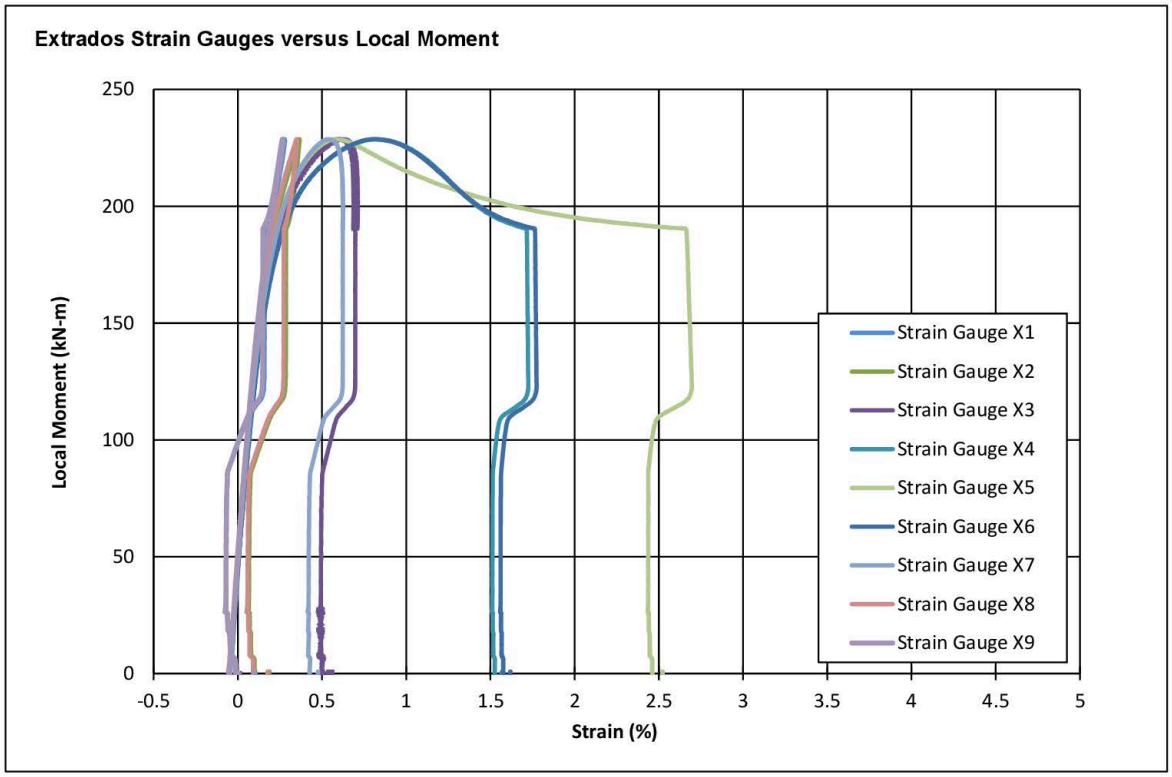

Compiled By:	Date:	Title:	C-FER Technologies
BCA	4-Feb-16	**Task 9.b Corrosion Bend Test**	
Reviewed:	Date:	Specimen Identification:	Page 3 of 8
CMJT	6-Apr-17	**9.b.i (Corrosion 1)**	

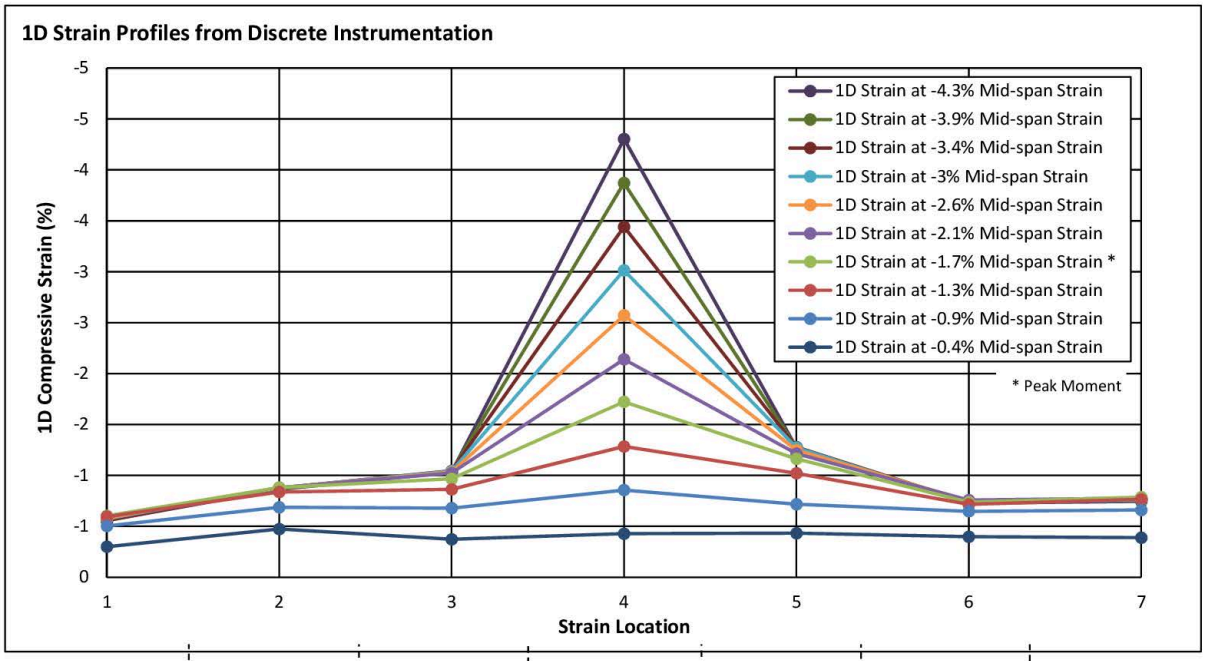

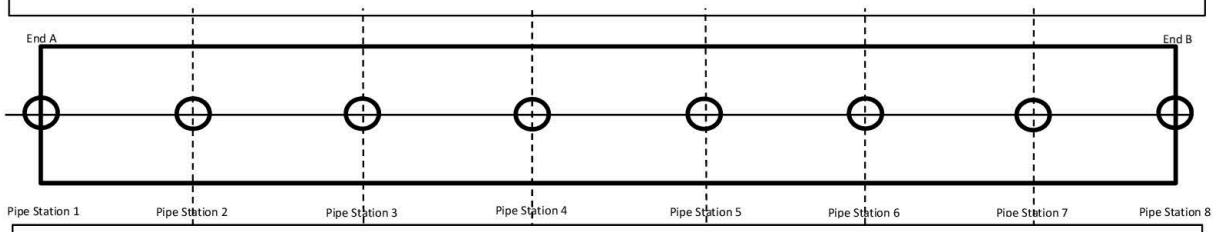

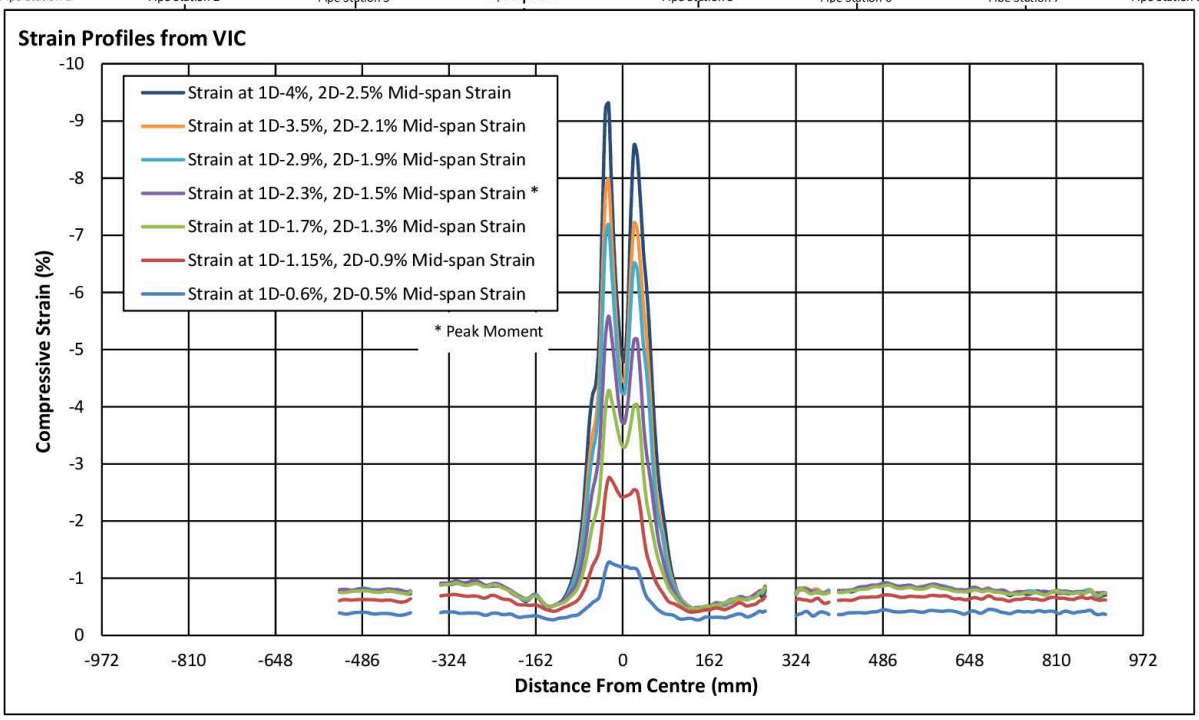

Compiled By:	Date:	Title:	C-FER Technologies
BCA	15-Mar-16	**Task 9.b Corrosion Bend Test**	
Reviewed:	Date:	Specimen Identification:	Page 4 of 8
CMJT	5-Apr-17	**9.b.i (Corrosion 1)**	

Pipe Measurements

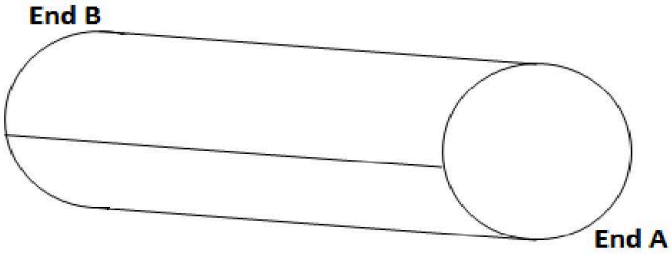

Pipe Specimen

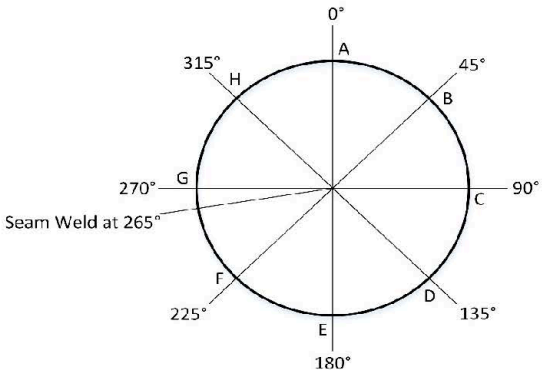

View from End A

Pre test Pup Lengths:

End A to 1	213	mm
1 to 2	324	mm
2 to 3	323	mm
3 to 4	325	mm
4 to 5	324	mm
5 to 6	325	mm
6 to 7	323	mm
7 to 8	323	mm
8 to End B	213	mm
Total Length	2 693	mm

Pre Test Pipe Lengths:

Position B	2 693	mm
Position D	2 691	mm
Position F	2 692	mm
Position H	2 694	mm
Average	2 693	mm

Circumferences:

End A measured circumference	1 020	mm
End B measured circumference	1 020	mm

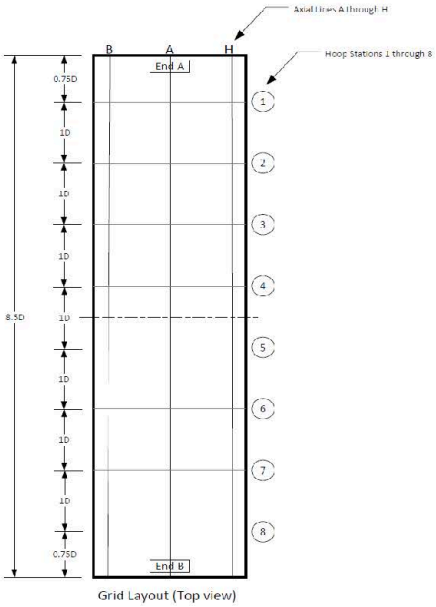

Measurement Grid

Measurements Taken By:	Date:	Title:	C-FER Technologies
TCT	28-Sep-15	**Task 9.b Corrosion Bend Test**	
Measurements Approved By:	Date:	Specimen Identification:	Page 5 of 8
BCA	28-Oct-15	**9.b.i (Corrosion 1)**	

Diameter Measurements

Micrometer:

Verification Rod 1	0.000	in
Verification Rod 2	0.000	in

Diameters in inches (as measured)

Station	Spanned Positions (in)			
	0° to 180°	45° to 225°	90° to 270°	135° to 315°
1	12.775	12.750	12.730	12.764
2	12.791	12.763	12.709	12.740
3	12.790	12.761	12.696	12.733
4	12.805	12.757	12.720	12.760
5	12.802	12.755	12.712	12.732
6	12.821	12.760	12.693	12.732
7	12.802	12.753	12.699	12.741
8	12.788	12.766	12.677	12.750

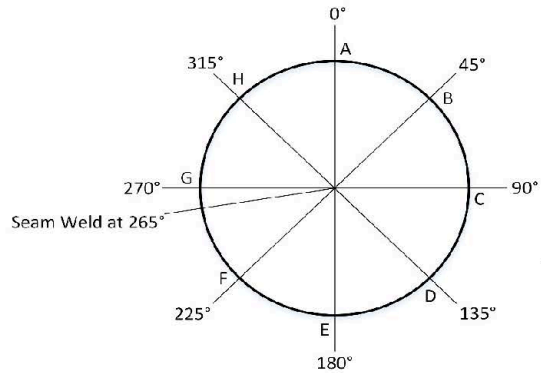

View from End A

Diameters in millimeters (converted)

Station	Spanned Positions (mm)			
	0° to 180°	45° to 225°	90° to 270°	135° to 315°
1	324.49	323.85	323.34	324.21
2	324.89	324.18	322.81	323.60
3	324.87	324.13	322.48	323.42
4	325.25	324.03	323.09	324.10
5	325.17	323.98	322.88	323.39
6	325.65	324.10	322.40	323.39
7	325.17	323.93	322.55	323.62
8	324.82	324.26	322.00	323.85

Station	Max. OD (mm)	@ Position	Min. OD (mm)	@ Position	Average OD (mm)	Standard Deviation (mm)	Ovality* (%)	Ovality incl. angle (°)
1	324.49	0	323.34	90	323.97	0.49	0.35	90
2	324.89	0	322.81	90	323.87	0.88	0.64	90
3	324.87	0	322.48	90	323.72	1.02	0.74	90
4	325.25	0	323.09	90	324.12	0.88	0.67	90
5	325.17	0	322.88	90	323.86	0.98	0.71	90
6	325.65	0	322.40	90	323.89	1.37	1.00	90
7	325.17	0	322.55	90	323.82	1.08	0.81	90
8	324.82	0	322.00	90	323.73	1.22	0.87	90

$$^{*}\ Ovality = \frac{(D_{max} - D_{min})}{(D_{nom})} * 100\%$$

Measurements Taken By:	Date:	Title:	C-FER Technologies
TCT	19-Oct-15	**Task 9.b Corrosion Bend Test**	
Measurements Approved By:	Date:	Specimen Identification:	Page 6 of 8
BCA	28-Oct-15	**9.b.i (Corrosion 1)**	

Wall Thickness Measurements

Micrometer Measurements
Pipe Ring Verification

	Micrometer (mm)	Ultrasonic probe (mm)
End A - Position B	6.376	6.39
End A - Position D	6.314	6.33
End A - Position F	6.344	6.37
End A - Position H	6.384	6.40
End B - Position B	6.391	6.40
End B - Position D	6.352	6.37
End B - Position F	6.306	6.29
End B - Position H	6.346	6.34

Micrometer ID:

Mitutoyo 0-1"
1" Calibration : 1.00030"

Ultrasonic Probe ID:
Dakota Ultrasonics MVX +/- 0.001"
Velocity: 5904 m/s [6.34mm One Point]

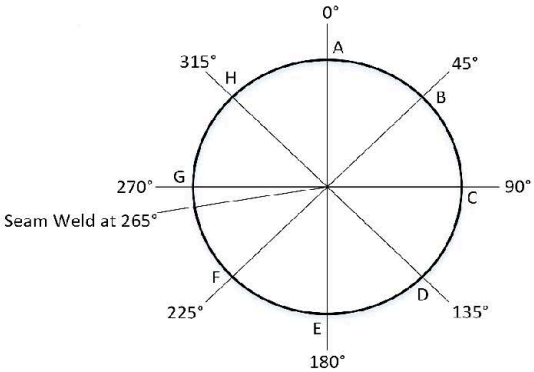

View from End A

Ultrasonic Measurements

Station	Circumferential Position							
	A	B	C	D	E	F	G	H
	Wall Thickness (mm)							
1	6.34	6.28	6.35	6.23	6.24	6.58	6.88	6.50
2	6.29	6.18	6.31	6.25	6.22	6.31	6.54	6.29
3	6.28	6.21	6.37	6.34	6.13	6.30	6.86	6.51
4	6.26	6.19	6.30	6.33	6.36	6.24	6.96	6.41
5	6.41	6.30	6.34	6.26	6.45	6.31	6.86	6.44
6	6.30	6.26	6.33	6.21	6.32	6.26	6.85	6.38
7	6.29	6.29	6.32	6.39	6.28	6.25	6.86	6.33
8	6.22	6.29	6.32	6.29	6.29	6.34	7.01	6.46

Average	6.38 mm
Std. dev	0.20 mm

Measurements Taken By:	Date:	Title:	C-FER Technologies
TCT	19-Oct-15	**Task 9.b Corrosion Bend Test**	
Measurements Approved By:	Date:	Specimen Identification:	Page 7 of 8
BCA	28-Oct-15	**9.b.i (Corrosion 1)**	

Instrumentation Layout

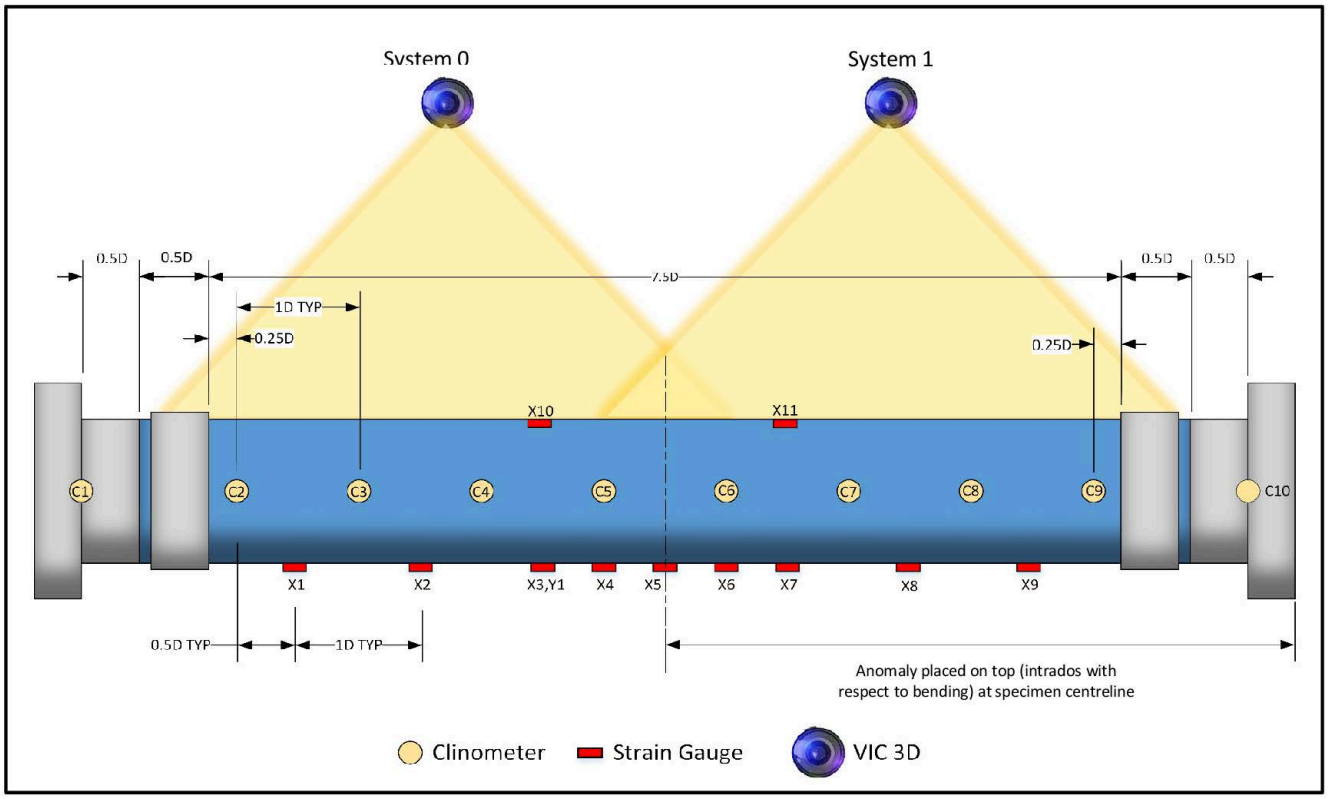

Drawing Done By:	Date:	Title:	C-FER Technologies
BCA	4-Feb-16	**Task 9.b Corrosion Bend Test**	
Drawing Approved By:	Date:	Specimen Identification:	Page 8 of 8
CMJT	6-Apr-17	**9.b.i (Corrosion 1)**	

Task 9.b Corrosion Bend Test

Specimen Identification:	**9.b.ii (Corrosion 2)**	C-FER Test Summary:	**Rev. 2, June 23, 2017**
C-FER Specimen Number:	**X65-ERW-1-2-9BII**	Test Date:	**November 5, 2015**

Nominal Pipe Characteristics

Nominal OD (mm) =	323.85
Average OD (mm) =	324.07
Nominal Wall Thickness (mm) =	6.35
Average Wall Thickness (mm) =	6.38
Specimen Length (mm) =	2700
Length/OD =	8.3
SMYS (MPa) =	448

Test Loading Procedure

1. The specimen was pressurized to 72% SMYS while applying compressive force to compensate for the end cap load.
2. The specimen was bent to the maximum displacement possible within the test frame.

Test Parameters

Target Net Pressure (MPa) =	12.65
Test Average Net Pressure (MPa) =	12.65

Test Results

Peak End Moment (kN-m) =	170
Peak Local Moment* (kN-m) =	255

Strains Across Buckle at Peak Moment

1D Strain - Discrete (%) =	-2.5
1D Strain - VIC (%) =	-2.8
2D Strain - VIC (%) =	-2.5

Anomaly - Corrosion Circumferential Groove

	Length	Width	Depth
Nominal Dimensions:	0.05D	0.2D	0.25t
Nominal Dimensions (mm):	16.2	64.8	1.59
Measured Dimensions (mm):	16.0	65.0	1.55

Failure Mode

Outward buckle formed at the specimen midpoint.

*Local Moment taken at specimen midpoint

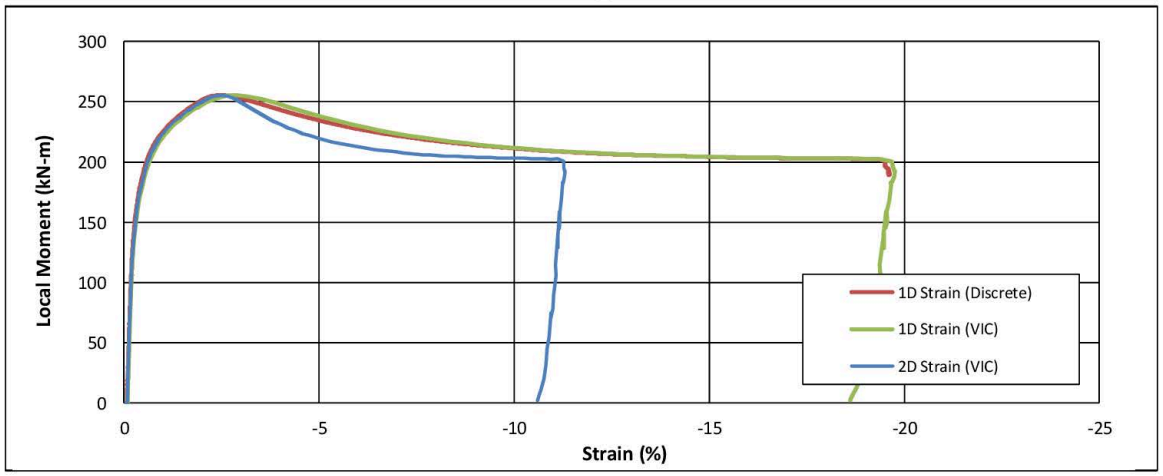

General Comments:

Testing was suspended during initial bending to address a test control issue. The bending moment during the first cycle reached approximately 100 kN-m and the specimen behaved elastically.

Post Test:

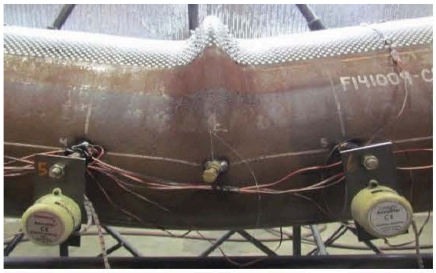

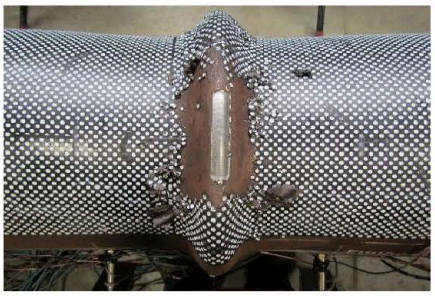

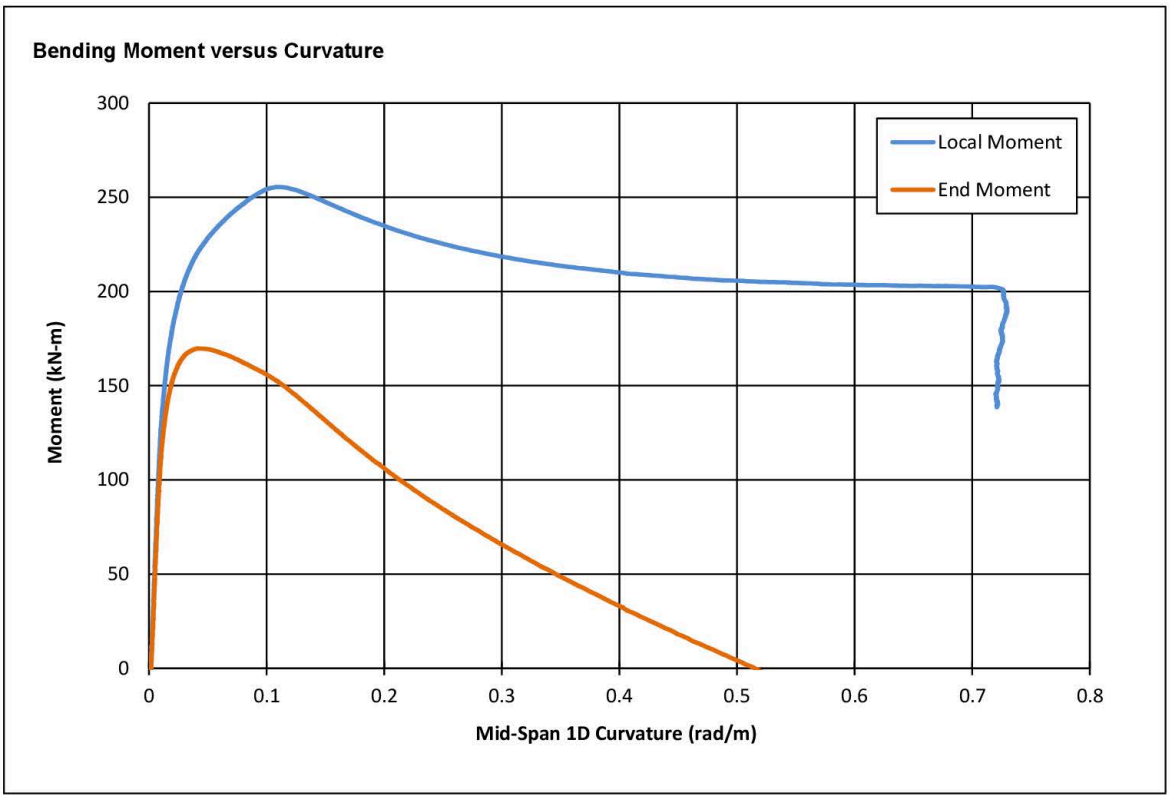

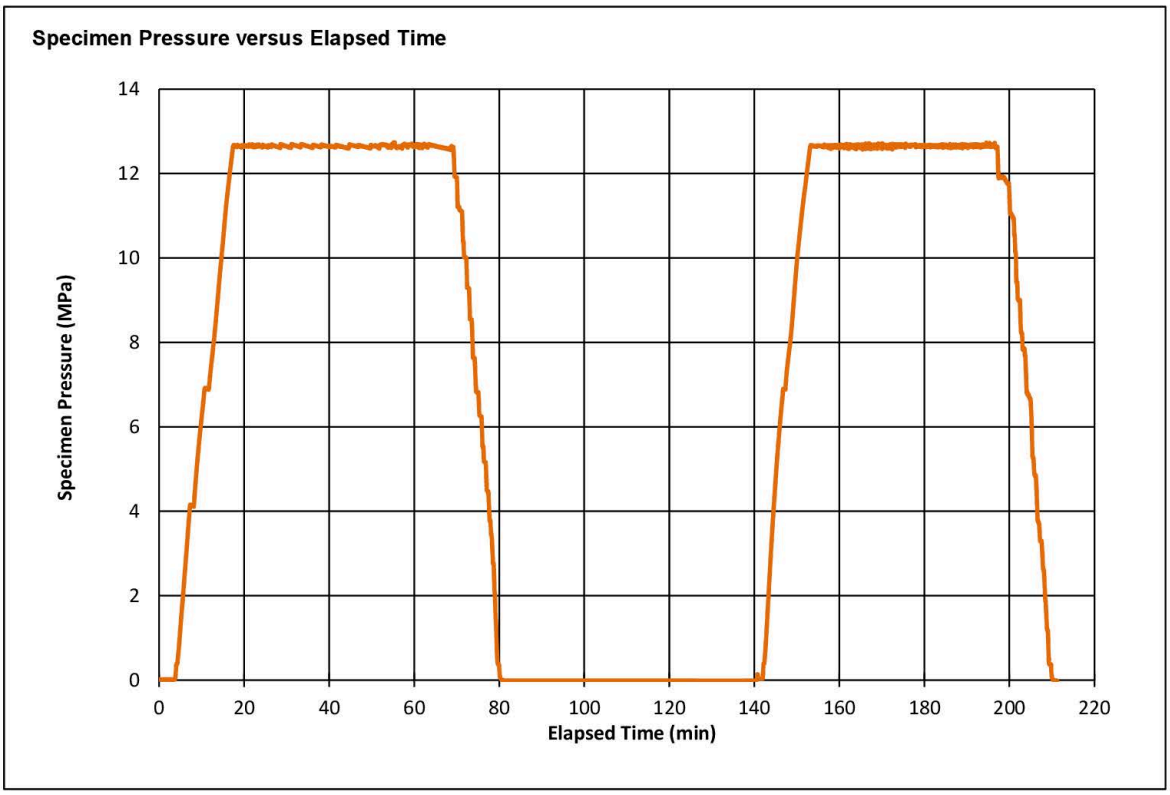

Compiled By:	Date:	Title:	C-FER Technologies
BCA	4-Feb-16	**Task 9.b Corrosion Bend Test**	
Reviewed:	Date:	Specimen Identification:	Page 2 of 8
CMJT	6-Apr-17	**9.b.ii (Corrosion 2)**	

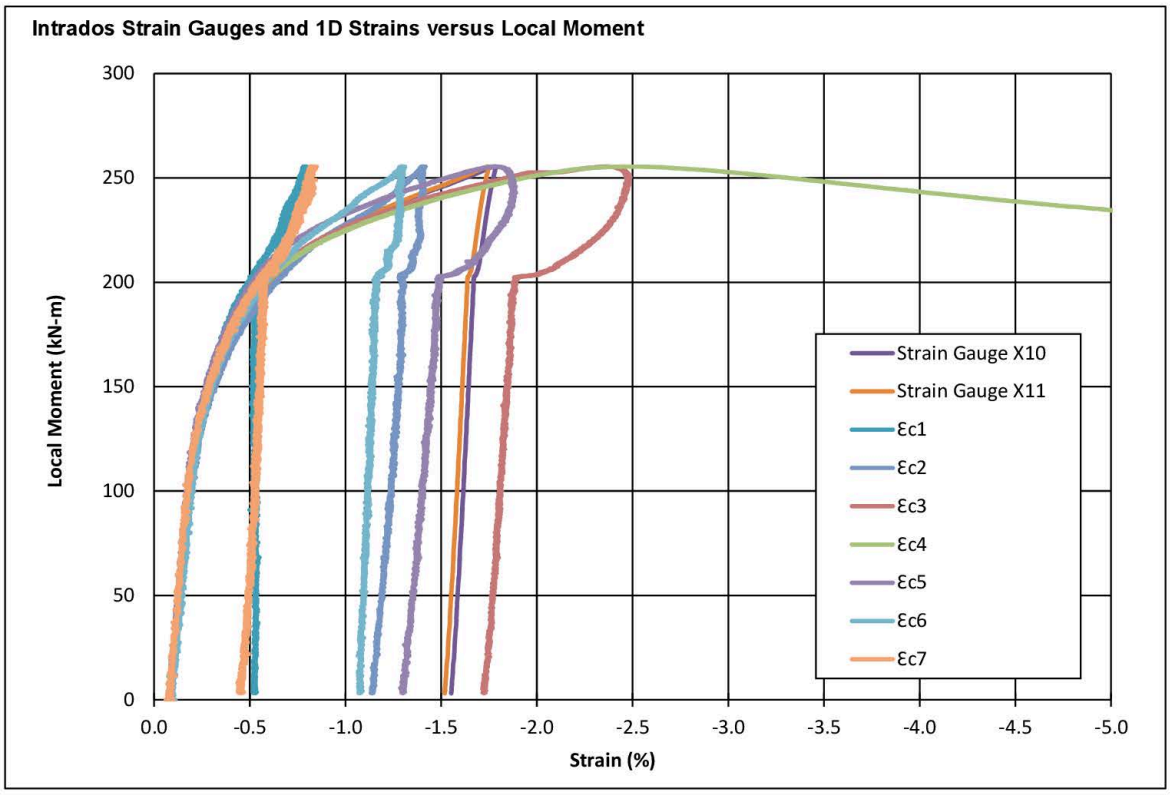

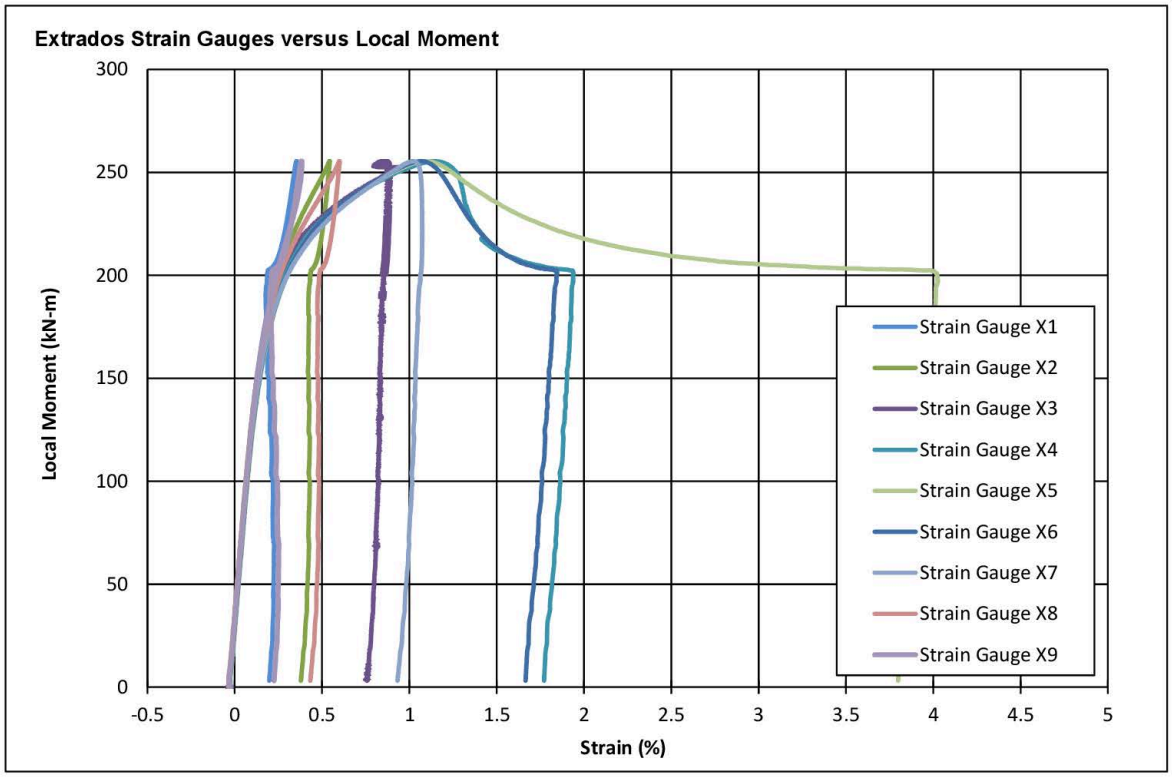

Compiled By:	Date:	Title:	C-FER Technologies
BCA	4-Feb-16	**Task 9.b Corrosion Bend Test**	
Reviewed:	Date:	Specimen Identification:	Page 3 of 8
CMJT	6-Apr-17	**9.b.ii (Corrosion 2)**	

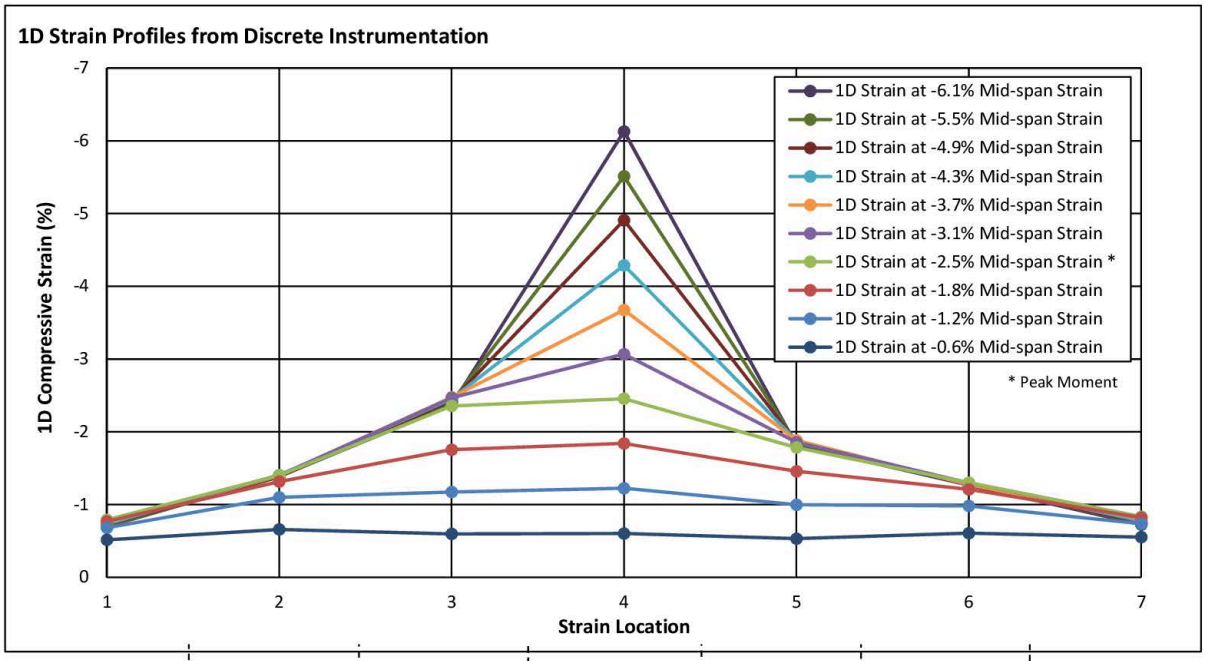

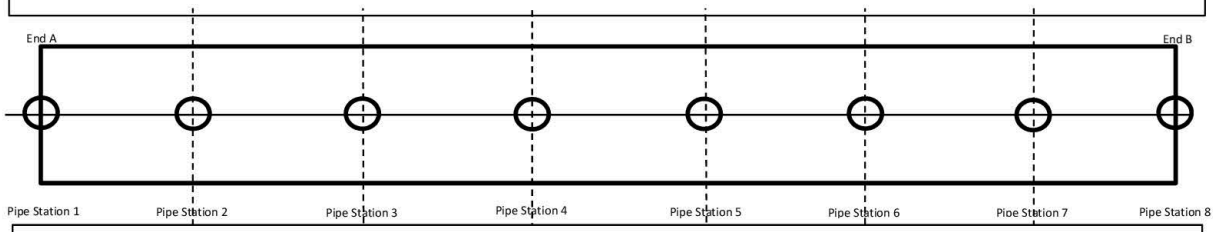

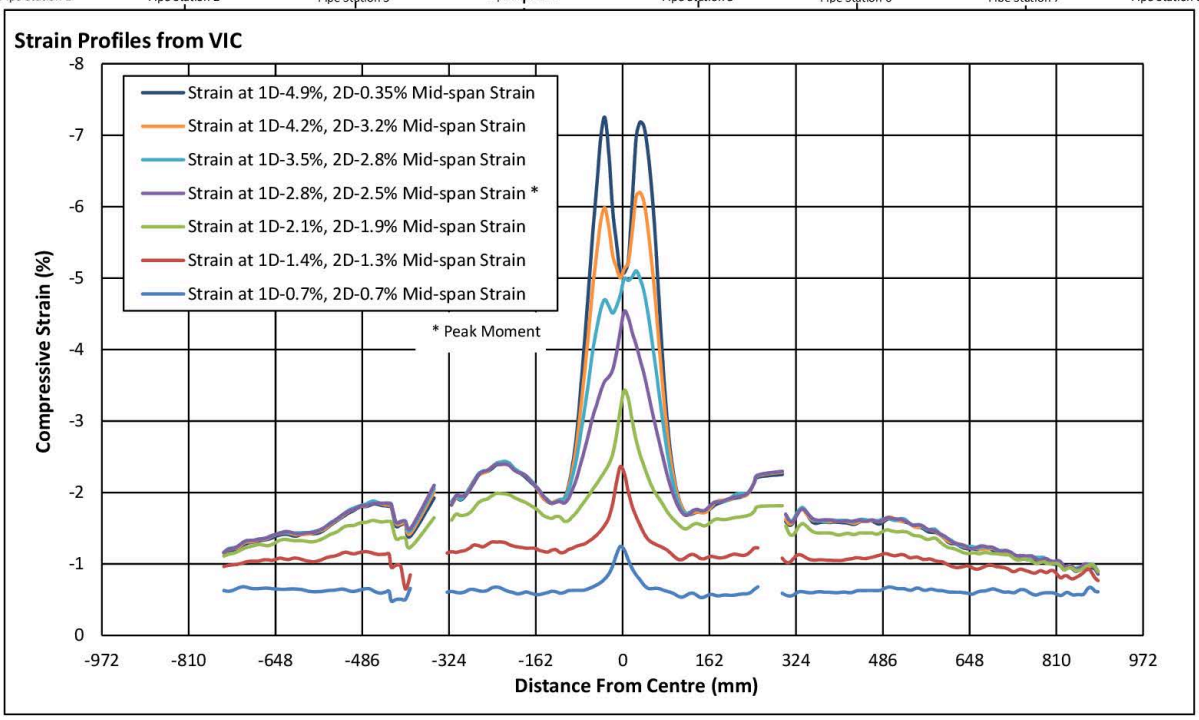

Compiled By:	Date:	Title:	C-FER Technologies
BCA	4-Feb-16	**Task 9.b Corrosion Bend Test**	
Reviewed:	Date:	Specimen Identification:	Page 4 of 8
CMJT	5-Apr-17	**9.b.ii (Corrosion 2)**	

Pipe Measurements

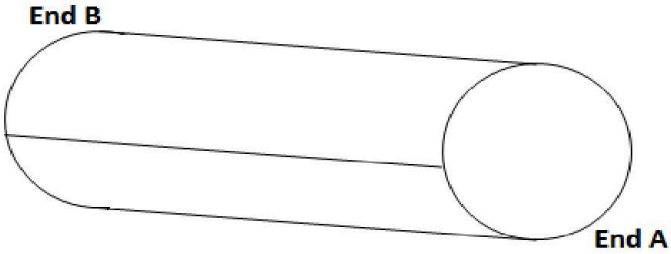

Pipe Specimen

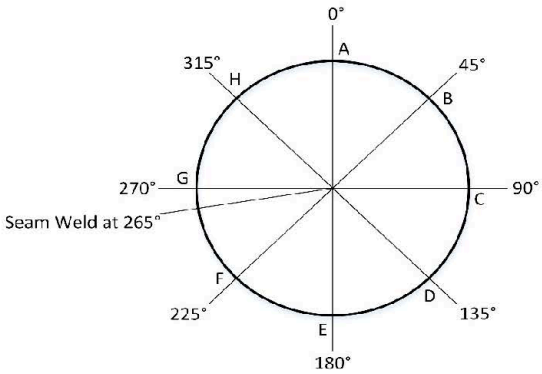

View from End A

Pre test Pup Lengths:

End A to 1	213	mm
1 to 2	324	mm
2 to 3	324	mm
3 to 4	324	mm
4 to 5	324	mm
5 to 6	323	mm
6 to 7	325	mm
7 to 8	324	mm
8 to End B	219	mm
Total Length	2 700	mm

Pre Test Pipe Lengths:

Position B	2 699	mm
Position D	2 697	mm
Position F	2 702	mm
Position H	2 701	mm
Average	2 700	mm

Circumferences:

End A measured circumference	1 020	mm
End B measured circumference	1 021	mm

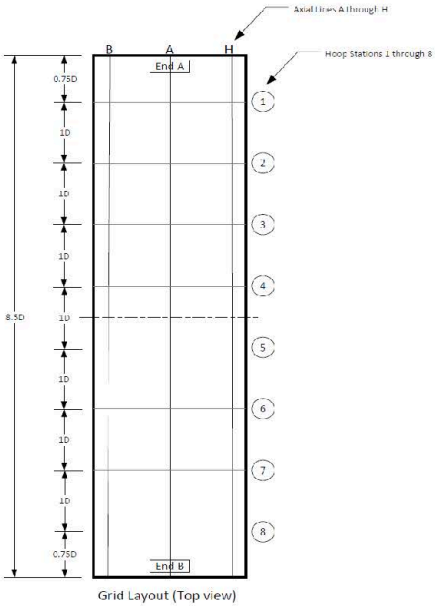

Measurement Grid

Measurements Taken By:	Date:	Title:	C-FER Technologies
TCT	28-Oct-15	**Task 9.b Corrosion Bend Test**	
Measurements Approved By:	Date:	Specimen Identification:	Page 5 of 8
BCA	4-Nov-15	**9.b.ii (Corrosion 2)**	

Diameter Measurements

Micrometer:

Verification Rod 1	0.001	in
Verification Rod 2	0.001	in

Diameters in inches (as measured)

Station	Spanned Positions (in)			
	0° to 180°	45° to 225°	90° to 270°	135° to 315°
1	12.82	12.75	12.73	12.75
2	12.80	12.74	12.72	12.75
3	12.80	12.73	12.72	12.79
4	12.80	12.74	12.73	12.76
5	12.81	12.75	12.73	12.76
6	12.82	12.74	12.73	12.77
7	12.80	12.73	12.73	12.77
8	12.79	12.74	12.73	12.75

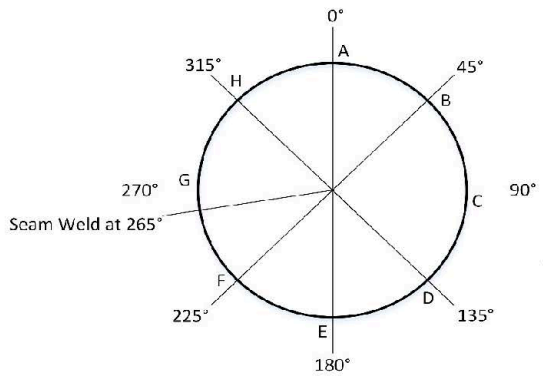

View from End A

Diameters in millimeters (converted)

Station	Spanned Positions (mm)			
	0° to 180°	45° to 225°	90° to 270°	135° to 315°
1	325.70	323.95	323.27	323.88
2	325.22	323.62	322.99	323.95
3	325.22	323.29	323.14	324.79
4	325.12	323.57	323.32	324.13
5	325.32	323.72	323.22	324.13
6	325.73	323.55	323.34	324.41
7	325.12	323.44	323.27	324.43
8	324.79	323.47	323.22	323.93

Station	Max. OD (mm)	@ Position	Min. OD (mm)	@ Position	Average OD (mm)	Standard Deviation (mm)	Ovality* (%)	Ovality incl. angle (°)
1	325.70	0	323.27	90	324.20	1.05	0.75	90
2	325.22	0	322.99	90	323.95	0.94	0.69	90
3	325.22	0	323.14	90	324.11	1.05	0.64	90
4	325.12	0	323.32	90	324.03	0.80	0.56	90
5	325.32	0	323.22	90	324.10	0.90	0.65	90
6	325.73	0	323.34	90	324.26	1.09	0.74	90
7	325.12	0	323.27	90	324.07	0.87	0.57	90
8	324.79	0	323.22	90	323.85	0.69	0.49	90

$$^{*}\ Ovality = \frac{(D_{max} - D_{min})}{(D_{nom})} * 100\%$$

Measurements Taken By:	Date:	Title:	C-FER Technologies
TCT	6-Oct-15	**Task 9.b Corrosion Bend Test**	
Measurements Approved By:	Date:	Specimen Identification:	Page 6 of 8
BCA	4-Nov-15	**9.b.ii (Corrosion 2)**	

Wall Thickness Measurements

Micrometer Measurements
Pipe Ring Verification

	Micrometer (mm)	Ultrasonic probe (mm)
End A - Position B	6.321	6.33
End A - Position D	6.290	6.26
End A - Position F	6.301	6.29
End A - Position H	6.348	6.36
End B - Position B	6.359	6.33
End B - Position D	6.292	6.27
End B - Position F	6.286	6.27
End B - Position H	6.355	6.33

Micrometer ID:

Mitutoyo 0-1" (HTS)
1" : 1.00005"

Ultrasonic Probe ID:
Dakota Ultrasonics MVX +/-0.001"
Velocity: 5904m/s

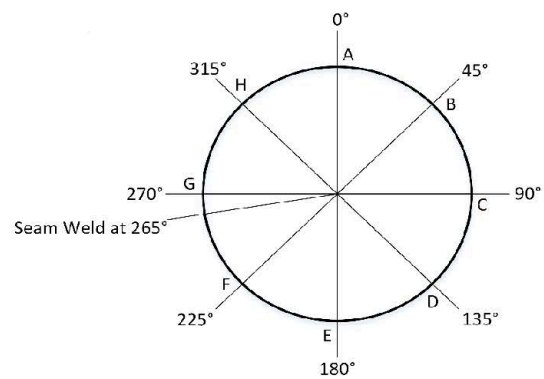

View from End A

Ultrasonic Measurements

Station	Circumferential Position							
	A	B	C	D	E	F	G	H
	Wall Thickness (mm)							
1	6.35	6.30	6.39	6.29	6.33	6.30	6.43	6.42
2	6.32	6.34	6.44	6.29	6.32	6.30	6.47	6.37
3	6.34	6.35	6.48	6.28	6.36	6.26	6.49	6.36
4	6.37	6.40	6.52	6.32	6.18	6.32	6.51	6.45
5	6.37	6.41	6.51	6.33	6.35	6.34	6.52	6.39
6	6.33	6.42	6.52	6.30	6.35	6.32	6.53	6.41
7	6.35	6.36	6.46	6.33	6.39	6.31	6.46	6.36
8	6.31	6.37	6.51	6.31	6.32	6.30	6.50	6.37

Average	6.38 mm
Std. dev	0.08 mm

Measurements Taken By:	Date:	Title:	C-FER Technologies
TCT	13-Oct-15	**Task 9.b Corrosion Bend Test**	
Measurements Approved By:	Date:	Specimen Identification:	Page 7 of 8
BCA	5-Nov-15	**9.b.ii (Corrosion 2)**	

Instrumentation Layout

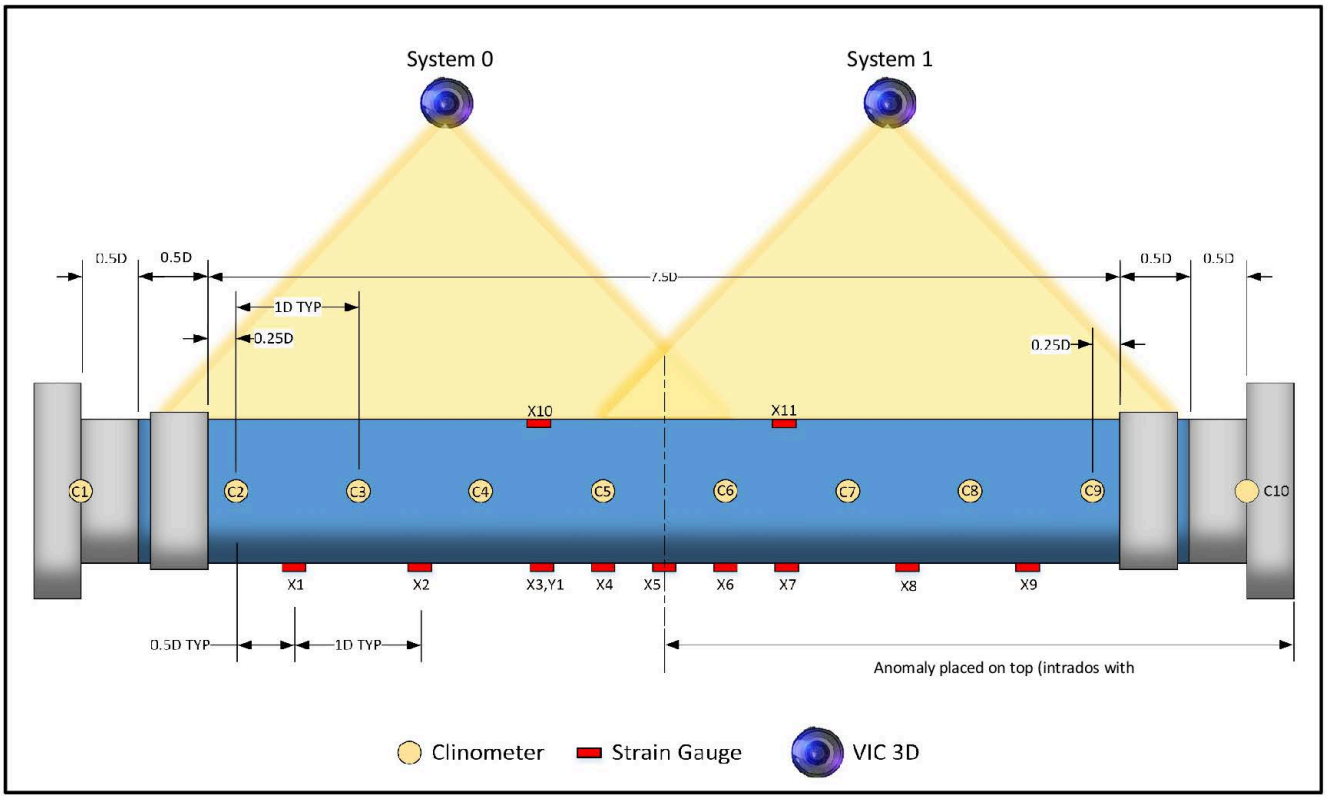

Drawing Done By:	Date:	Title:	C-FER Technologies
BCA	4-Feb-16	**Task 9.b Corrosion Bend Test**	
Drawing Approved By:	Date:	Specimen Identification:	Page 8 of 8
CMJT	6-Apr-17	**9.b.ii (Corrosion 2)**	

Task 9.b Corrosion Bend Test

Specimen Identification: **9.b.iii (Corrosion 3)**
C-FER Specimen Number: **X65-ERW-1-2-BIII**

C-FER Test Summary: **Rev. 2, June 23, 2017**
Test Date: **Novmber 16, 2015**

Nominal Pipe Characteristics

Nominal OD (mm) =	323.85
Average OD (mm) =	324.07
Nominal Wall Thickness (mm) =	6.35
Average Wall Thickness (mm) =	6.35
Specimen Length (mm) =	2705
Length/OD =	8.3
SMYS (MPa) =	448

Test Loading Procedure

1. The specimen was pressurized to 72% SMYS while applying compressive force to compensate for the end cap load.
2. The specimen was bent to the maximum displacement possible within the test frame.

Test Parameters

Target Net Pressure (MPa) =	12.65
Test Average Net Pressure (MPa) =	12.65

Test Results

Peak End Moment (kN-m) =	157
Peak Local Moment* (kN-m) =	208

Strains Across Buckle at Peak Moment

1D Strain - Discrete (%) =	-2.5
1D Strain - VIC (%) =	-2.6
2D Strain - VIC (%) =	-1.5

Anomaly - Deep Corrosion Patch

	Length	Width	Depth
Nominal Dimensions:	0.2D	0.2D	0.4t
Nominal Dimensions (mm):	64.8	64.8	2.54
Measured Dimensions (mm):	65.0	65.0	2.49

Failure Mode

Outward buckle formed at the specimen midpoint. A leak formed on the edge of the corrosion patch at a 1D strain of 11.3%

*Local Moment taken at specimen midpoint

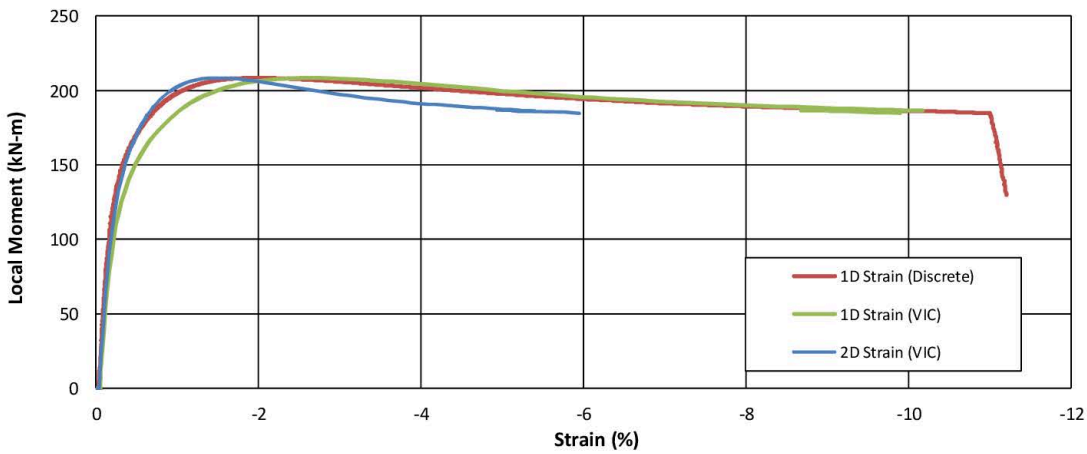

General Comments:

Post Test:

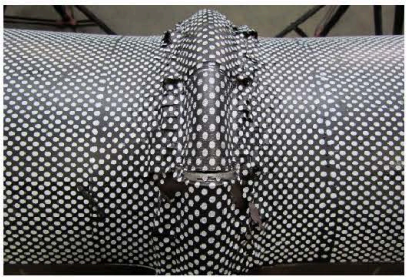

		Title: **Task 9.b Corrosion Bend Test**	C-FER Technologies
Reviewed: CMJT	Date: 23-Jun-17	Specimen Identification: **9.b.iii (Corrosion 3)**	Page 1 of 8

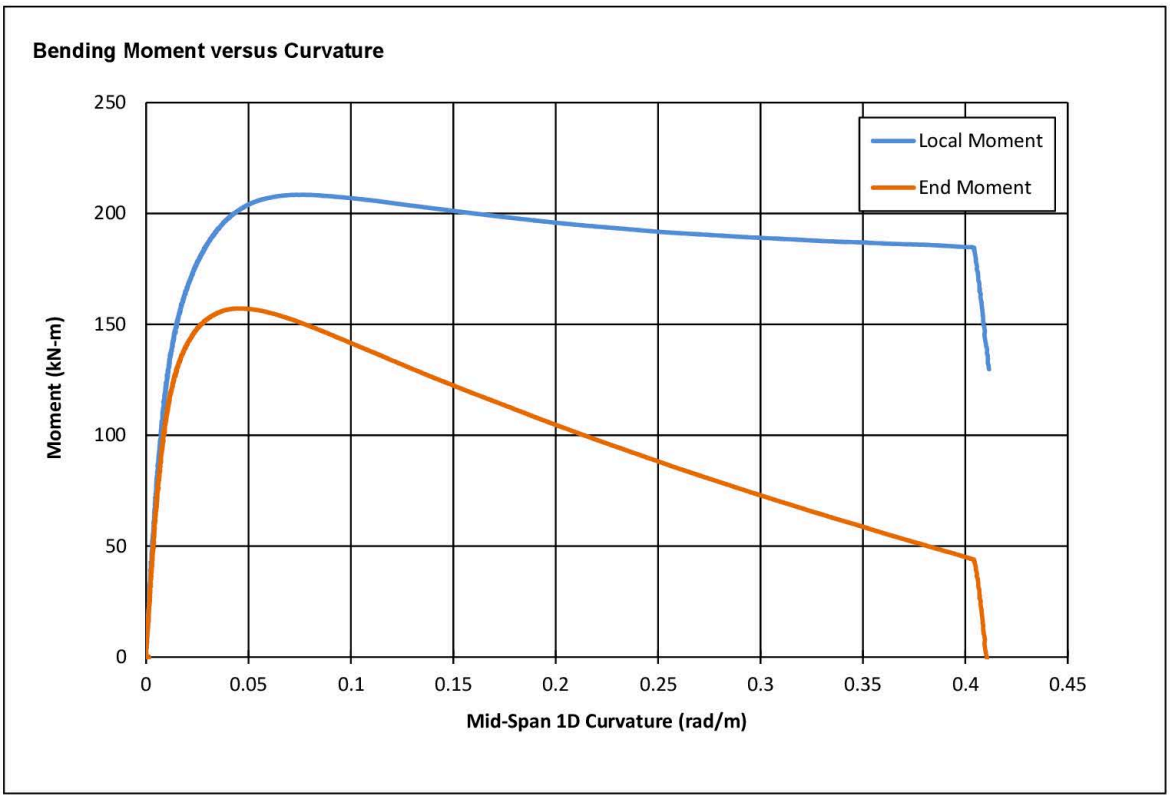

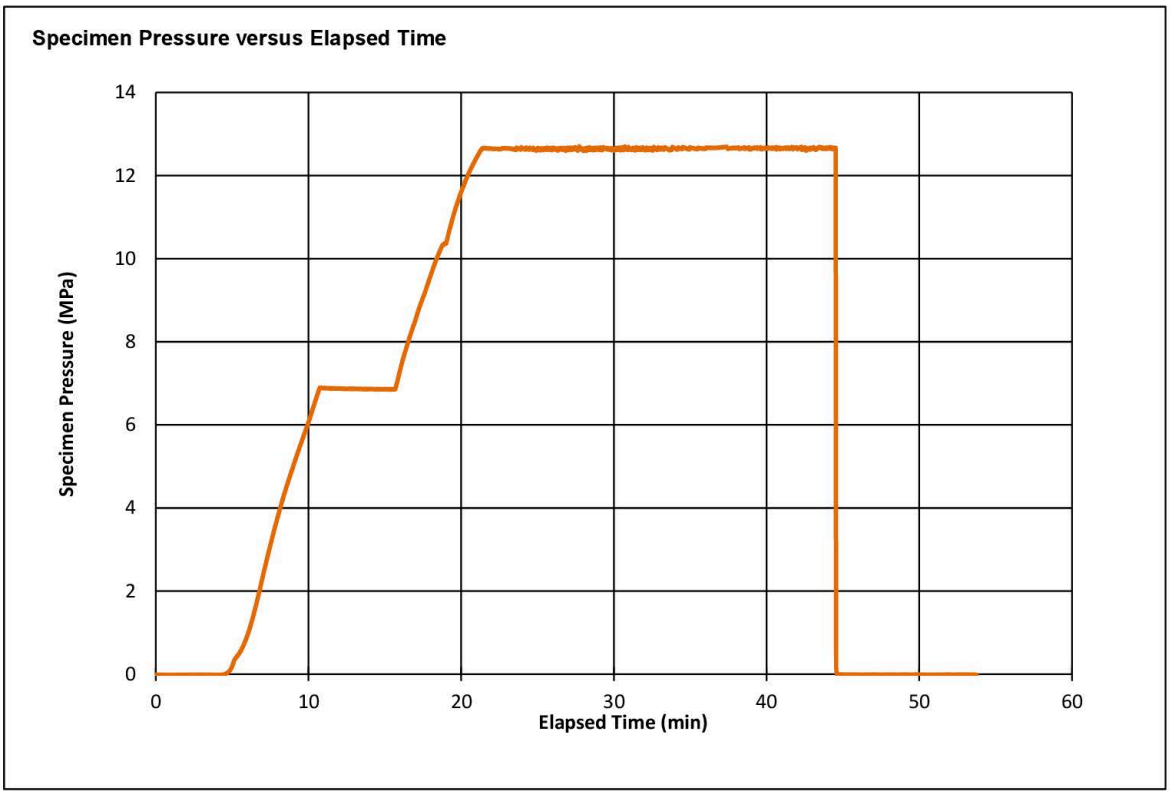

Compiled By:	Date:	Title:	C-FER Technologies
BCA	4-Feb-16	**Task 9.b Corrosion Bend Test**	
Reviewed:	Date:	Specimen Identification:	Page 2 of 8
CMJT	6-Apr-17	**9.b.iii (Corrosion 3)**	

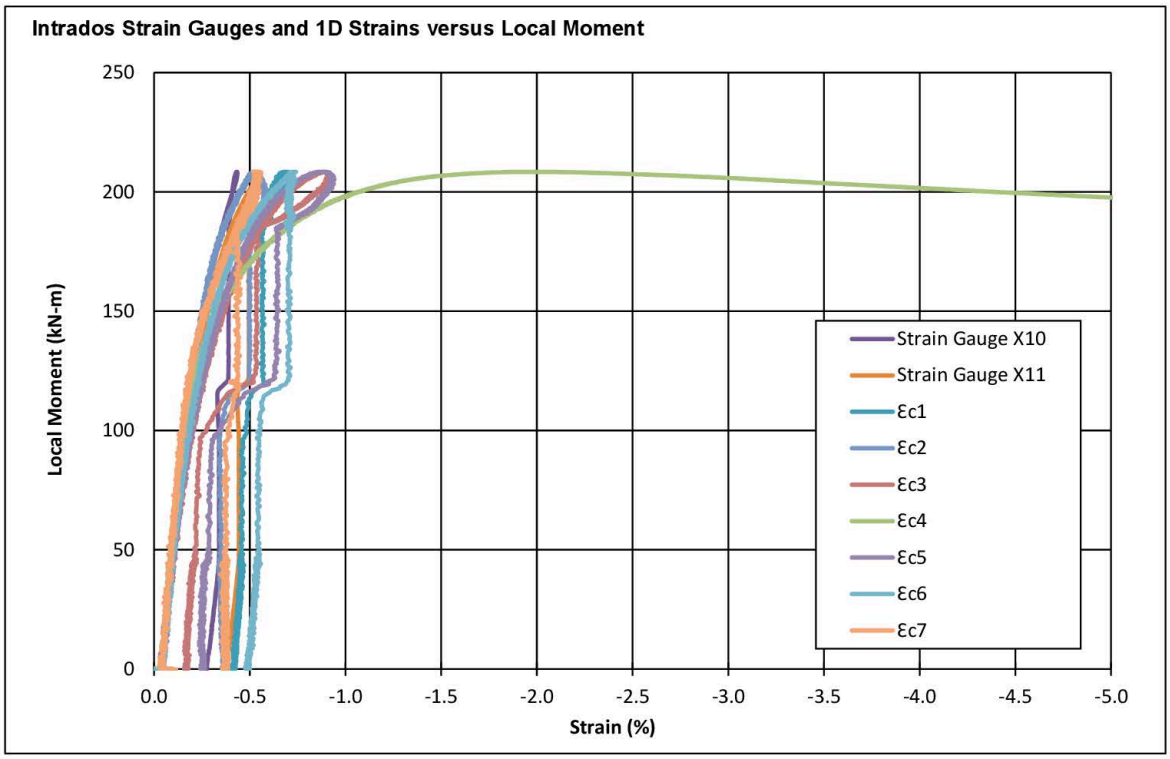

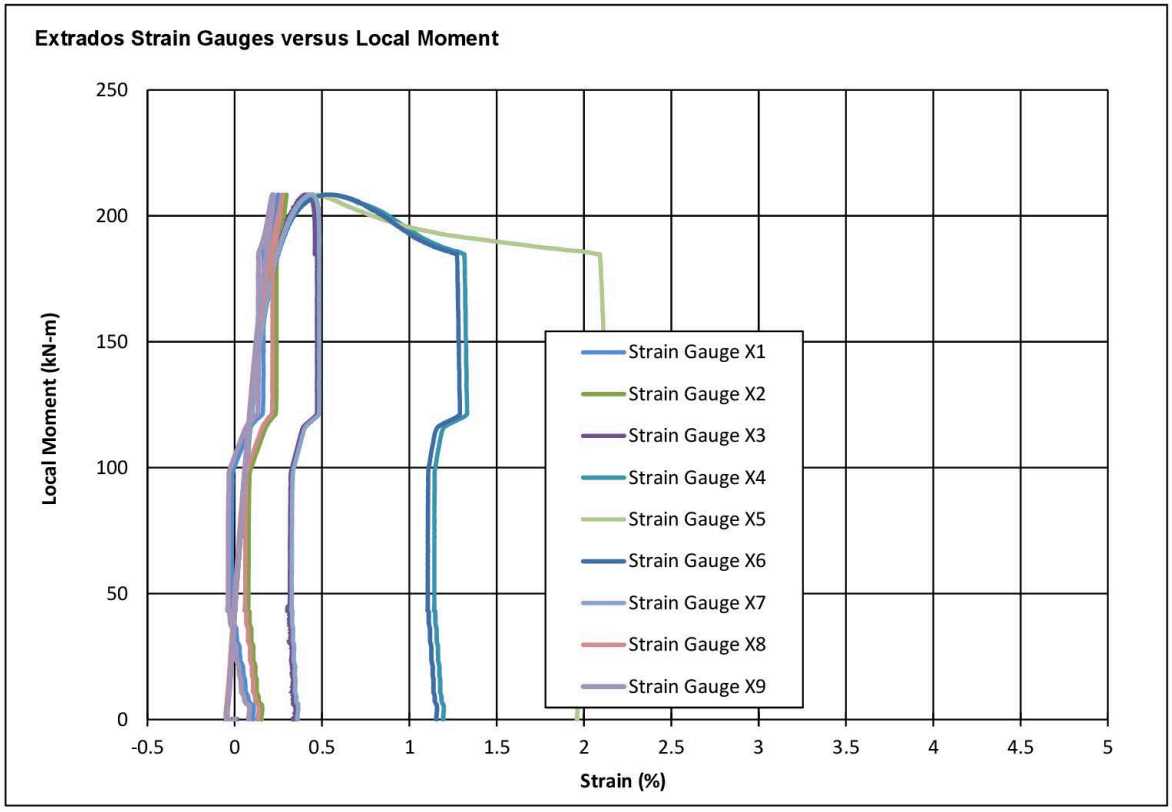

Compiled By:	Date:	Title:	C-FER Technologies
BCA	4-Feb-16	**Task 9.b Corrosion Bend Test**	
Reviewed:	Date:	Specimen Identification:	
CMJT	6-Apr-17	**9.b.iii (Corrosion 3)**	Page 3 of 8

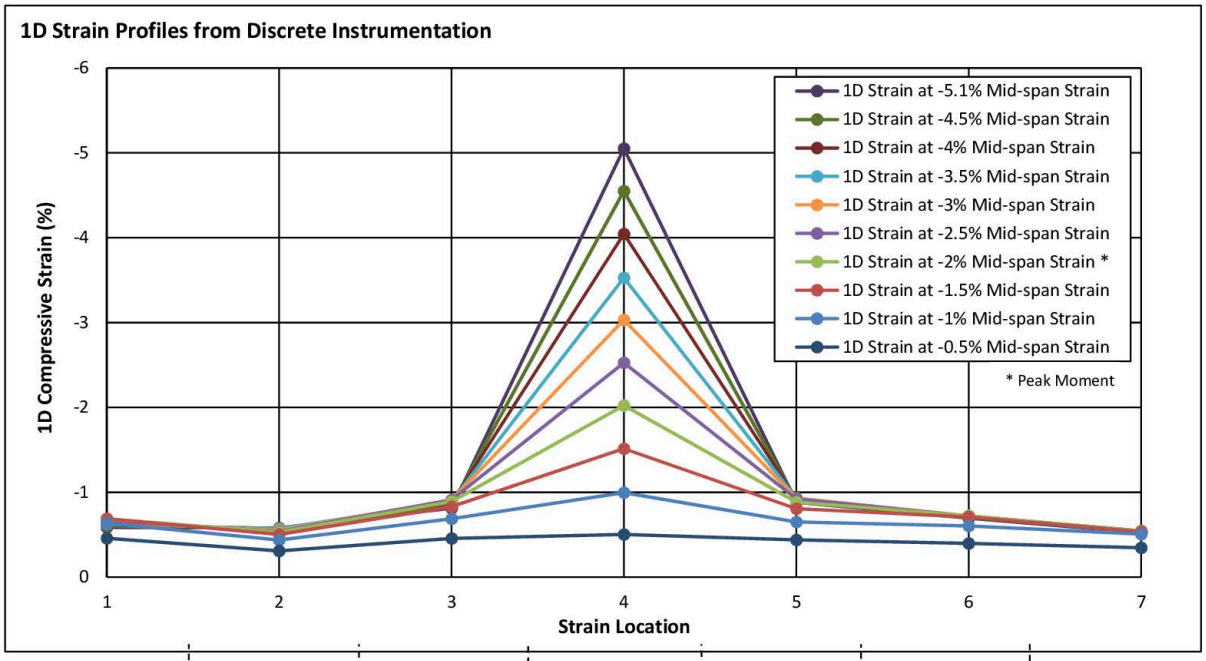

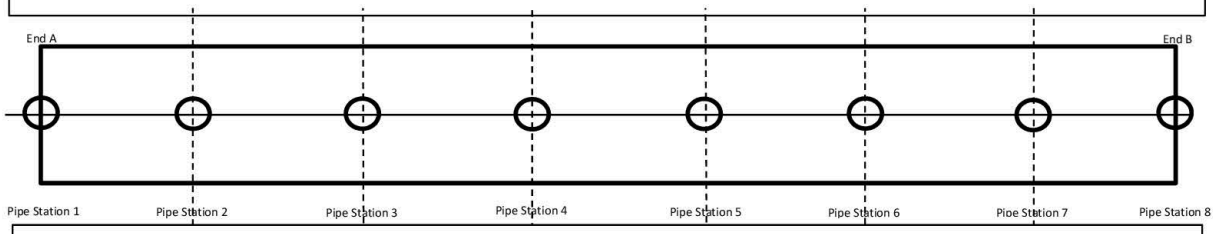

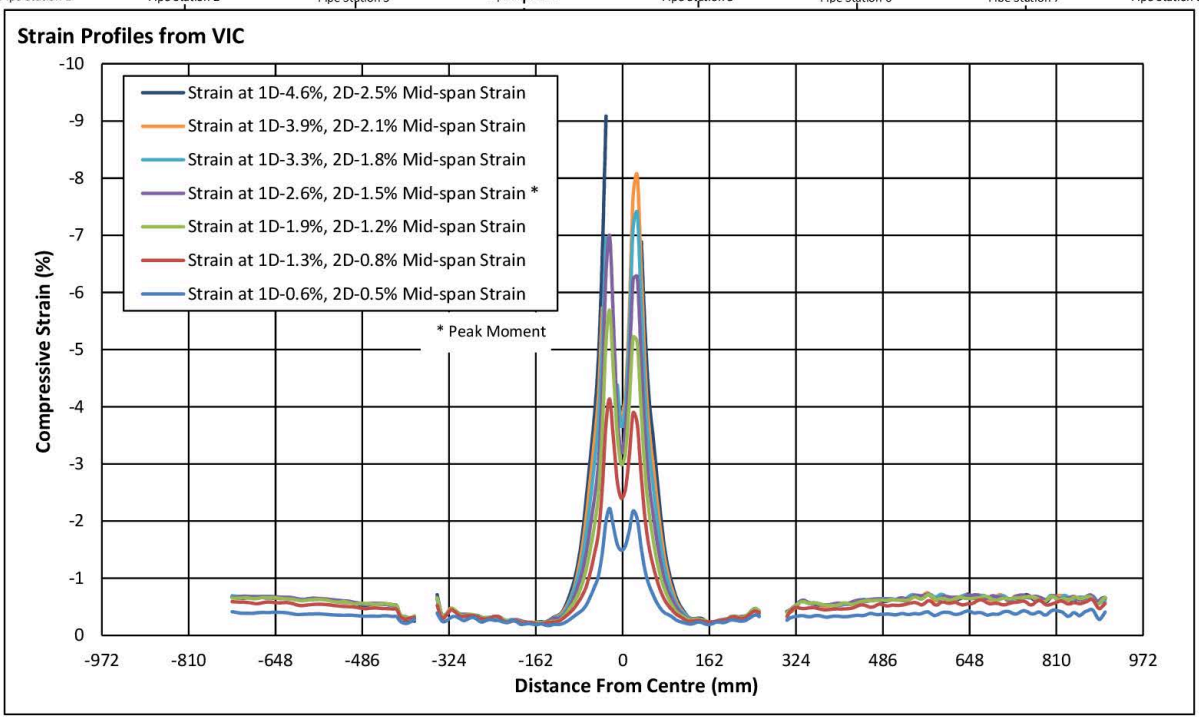

Compiled By:	Date:	Title:	C-FER Technologies
BCA	4-Feb-16	**Task 9.b Corrosion Bend Test**	
Reviewed:	Date:	Specimen Identification:	Page 4 of 8
CMJT	5-Apr-17	**9.b.iii (Corrosion 3)**	

Pipe Measurements

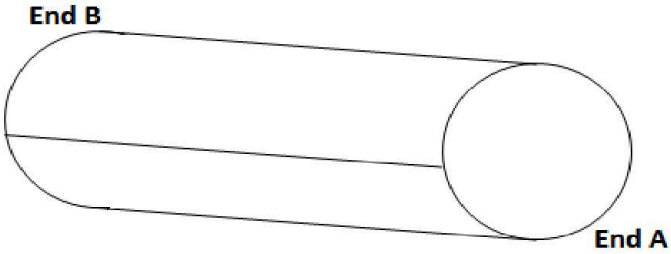

Pipe Specimen

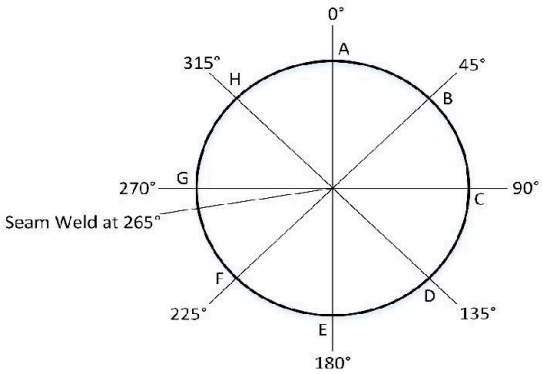

View from End A

Pre test Pup Lengths:

End A to 1	221	mm
1 to 2	324	mm
2 to 3	324	mm
3 to 4	323	mm
4 to 5	323	mm
5 to 6	324	mm
6 to 7	324	mm
7 to 8	323	mm
8 to End B	220	mm
Total Length	2 706	mm

Pre Test Pipe Lengths:

Position B	2 706	mm
Position D	2 704	mm
Position F	2 704	mm
Position H	2 705	mm
Average	2 705	mm

Circumferences:

End A measured circumference	1 021	mm
End B measured circumference	1 023	mm

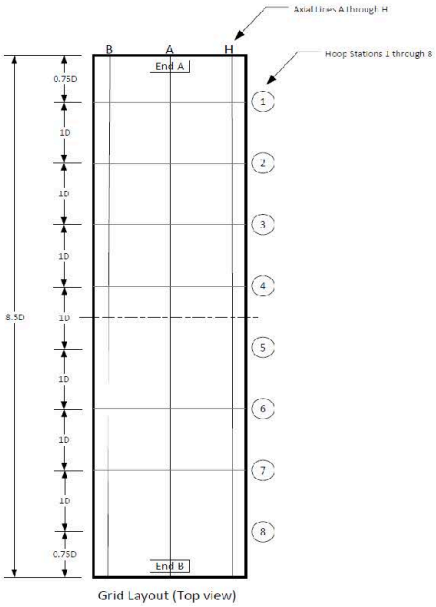

Measurement Grid

Measurements Taken By:	Date:	Title:	C-FER Technologies
TUT	10-Nov-15	**Task 9.b Corrosion Bend Test**	
Measurements Approved By:	Date:	Specimen Identification:	Page 5 of 8
BCA	13-Nov-15	**9.b.iii (Corrosion 3)**	

Diameter Measurements

Micrometer:

Verification Rod 1	0.001	in
Verification Rod 2	0.001	in

Diameters in inches (as measured)

Station	Spanned Positions (in)			
	0° to 180°	45° to 225°	90° to 270°	135° to 315°
1	12.801	12.735	12.745	12.790
2	12.799	12.734	12.724	12.764
3	12.801	12.739	12.714	12.757
4	12.793	12.740	12.719	12.751
5	12.803	12.738	12.743	12.790
6	12.818	12.741	12.722	12.774
7	12.804	12.736	12.714	12.764
8	12.782	12.735	12.730	12.773

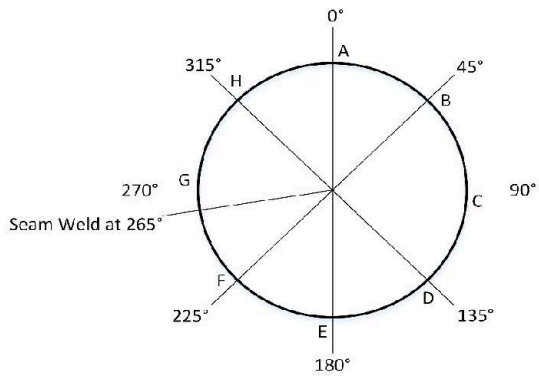

View from End A

Diameters in millimeters (converted)

Station	Spanned Positions (mm)			
	0° to 180°	45° to 225°	90° to 270°	135° to 315°
1	325.15	323.47	323.72	324.87
2	325.09	323.44	323.19	324.21
3	325.15	323.57	322.94	324.03
4	324.94	323.60	323.06	323.88
5	325.20	323.55	323.67	324.87
6	325.58	323.62	323.14	324.46
7	325.22	323.49	322.93	324.21
8	324.66	323.47	323.34	324.43

Station	Max. OD (mm)	@ Position	Min. OD (mm)	@ Position	Average OD (mm)	Standard Deviation (mm)	Ovality* (%)	Ovality incl. angle (°)
1	325.15	0	323.47	45	324.30	0.83	0.52	45
2	325.09	0	323.19	90	323.98	0.86	0.59	90
3	325.15	0	322.94	90	323.92	0.93	0.68	90
4	324.94	0	323.06	90	323.87	0.79	0.58	90
5	325.20	0	323.55	45	324.32	0.83	0.51	45
6	325.58	0	323.14	90	324.20	1.07	0.75	90
7	325.22	0	322.93	90	323.96	0.99	0.71	90
8	324.66	0	323.34	90	323.98	0.67	0.41	90

$$^{*}\ Ovality = \frac{(D_{\max} - D_{\min})}{(D_{nom})} * 100\%$$

Measurements Taken By:	Date:	Title:	C-FER Technologies
TCT	10-Nov-15	**Task 9.b Corrosion Bend Test**	
Measurements Approved By:	Date:	Specimen Identification:	Page 6 of 8
BCA	13-Nov-15	**9.b.iii (Corrosion 3)**	

Wall Thickness Measurements

Micrometer Measurements
Pipe Ring Verification

	Micrometer (mm)	Ultrasonic probe (mm)
End A - Position B	6.290	6.29
End A - Position D	6.290	6.29
End A - Position F	6.250	6.25
End A - Position H	6.310	6.31
End B - Position B	6.320	6.32
End B - Position D	6.260	6.26
End B - Position F	6.250	6.25
End B - Position H	6.280	6.28

Micrometer ID:

Mitutoyo 0-1" (HTS)
1": 1.00030"

Ultrasonic Probe ID:
Dakota Ultrasonics MVX +/-0.001"
Velocity: 5904 m/s

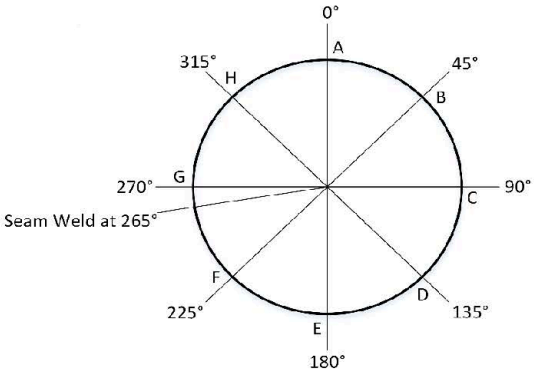

View from End A

Ultrasonic Measurements

Station	Circumferential Position							
	A	B	C	D	E	F	G	H
	Wall Thickness (mm)							
1	6.270	6.270	6.390	6.240	6.280	6.250	6.440	6.250
2	6.310	6.300	6.410	6.250	6.310	6.260	6.370	6.310
3	6.340	6.340	6.450	6.300	6.360	6.290	6.520	6.370
4	6.380	6.350	6.500	6.320	6.340	6.290	6.480	6.380
5	6.340	6.380	6.470	6.340	6.390	6.360	6.480	6.360
6	6.320	6.340	6.450	6.300	6.350	6.320	6.490	6.380
7	6.320	6.330	6.440	6.270	6.350	6.290	6.480	6.380
8	6.280	6.360	6.400	6.240	6.290	6.230	6.430	6.330

Average	6.35 mm
Std. dev	0.07 mm

Measurements Taken By:	Date:	Title:	C-FER Technologies
TCT	10-Nov-15	**Task 9.b Corrosion Bend Test**	
Measurements Approved By:	Date:	Specimen Identification:	Page 7 of 8
BCA	13-Nov-15	**9.b.iii (Corrosion 3)**	

Instrumentation Layout

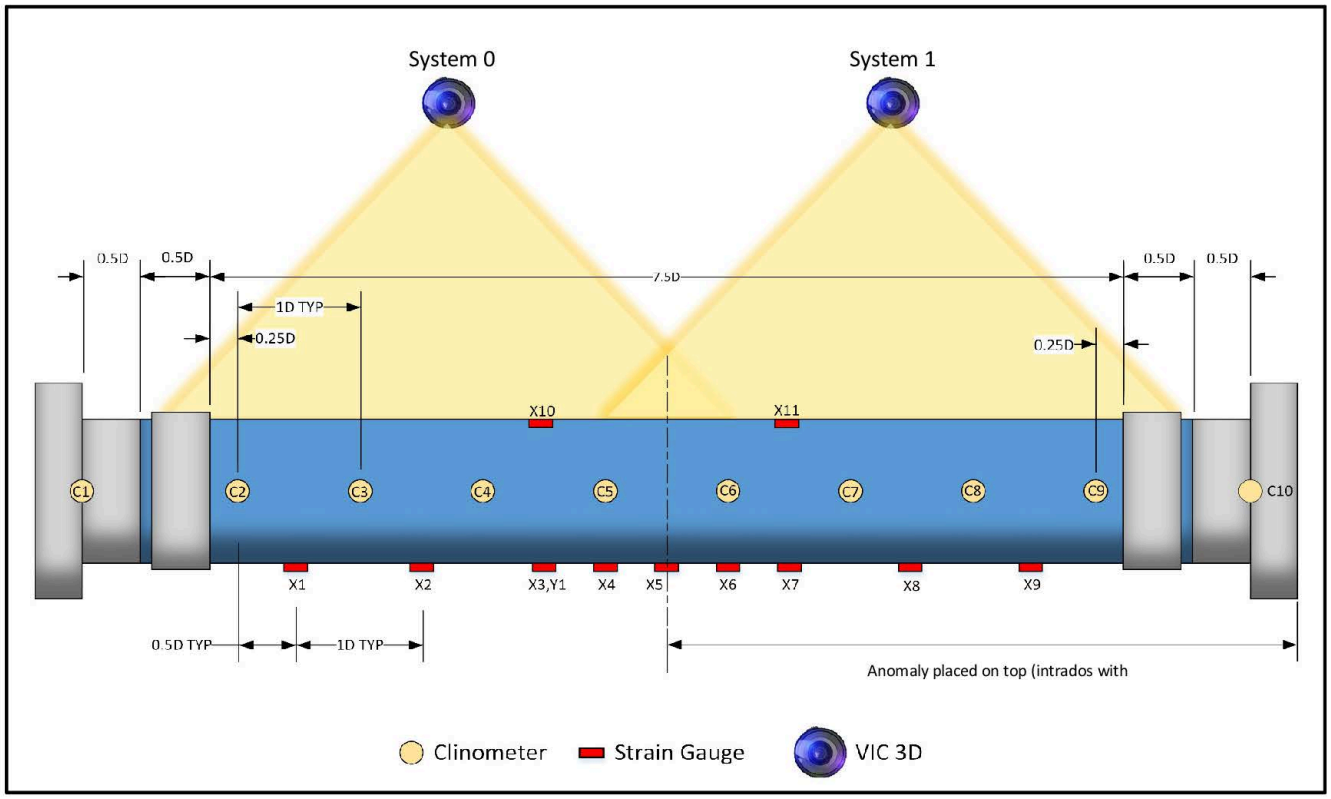

Drawing Done By:	Date:	Title:	C-FER Technologies
BCA	4-Feb-16	**Task 9.b Corrosion Bend Test**	
Drawing Approved By:	Date:	Specimen Identification:	Page 8 of 8
CMJT	6-Apr-17	**9.b.iii (Corrosion 3)**	

Task 9.c Bend Test with Dent

Specimen Identification:	**9.c.i (Dent 1)**	C-FER Test Summary:	**Rev. 2 June 23, 2017**
C-FER Specimen Number:	**X65-ERW-1-1-9CI**	Test Date:	**September 22, 2015**

Nominal Pipe Characteristics

Nominal OD (mm) =	323.85
Average OD (mm) =	323.97
Nominal Wall Thickness (mm) =	6.35
Average Wall Thickness (mm) =	6.32
Specimen Length (mm) =	2700
Length/OD =	8.3
SMYS (MPa) =	448

Test Loading Procedure

1. The specimen was pressurized to 90% SMYS then 5 cycles of 72%.
2. The specimen was pressurized to 72% SMYS while applying compressive force to compensate for the end cap load.
3. The specimen was bent to the maximum displacement possible within the test frame.

Test Parameters

Target Net Pressure (MPa) =	12.65
Test Average Net Pressure (MPa) =	12.66

Test Results

Peak End Moment (kN-m) =	166
Peak Local Moment* (kN-m) =	255

Strains Across Buckle at Peak Moment

1D Strain - Discrete (%) =	-3.7
1D Strain - VIC (%) =	-3.3
2D Strain - VIC (%) =	-3.0

Anomaly - Dent midspan intrados 63.5mm diameter ball

Indentation Depth (mm) =	10.7
Dent Depth After Rebound (mm) =	5.2
Dent Depth After Pressure Cycles (mm) =	3.8

Failure Mode

Outward buckle approximately 58mm from specimen midpoint

*Local Moment taken at specimen midpoint

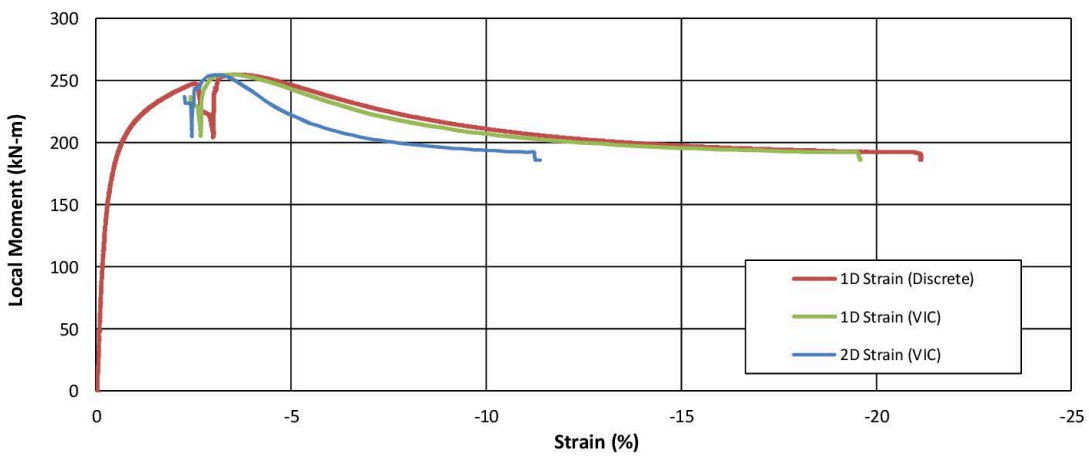

General Comments:

Early test VIC data missing due to VIC computer malfunction.

Testing was paused to restart VIC computer.

Post Test:

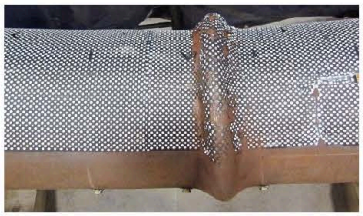

		Title: **Task 9.c Bend Test with Dent**	C-FER Technologies
Reviewed: CMJT	Date: 23-Jun-17	Specimen Identification: **9.c.i (Dent 1)**	Page 1 of 9

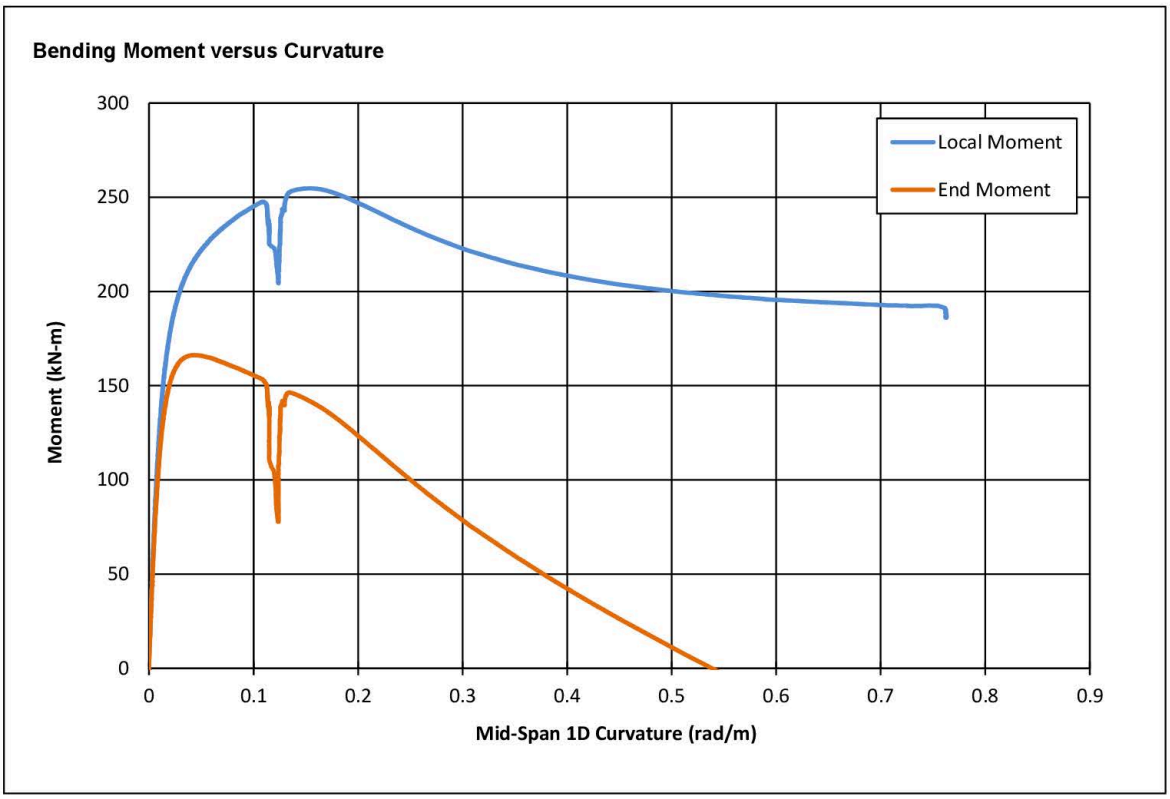

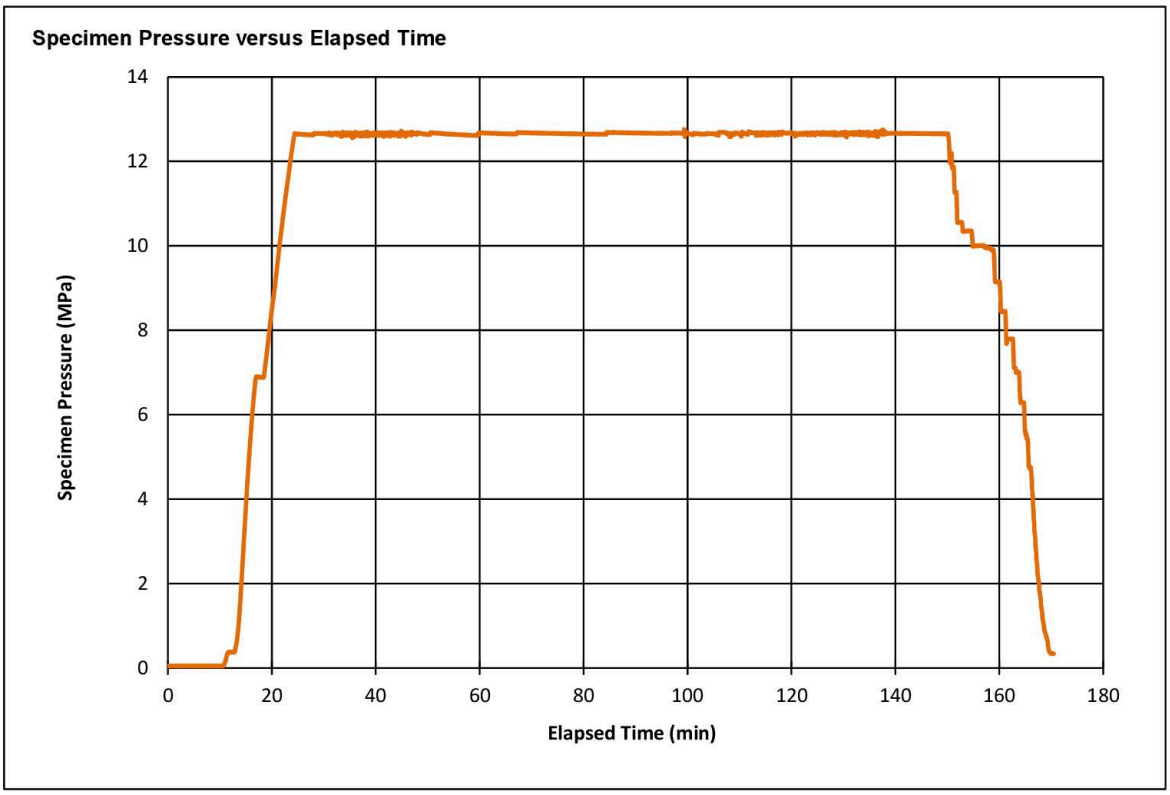

Compiled By:	Date:	Title:	C-FER Technologies
BCA	25-Aug-15	**Task 9.c Bend Test with Dent**	
Reviewed:	Date:	Specimen Identification:	Page 2 of 9
CMJT	5-Apr-17	**9.c.i (Dent 1)**	

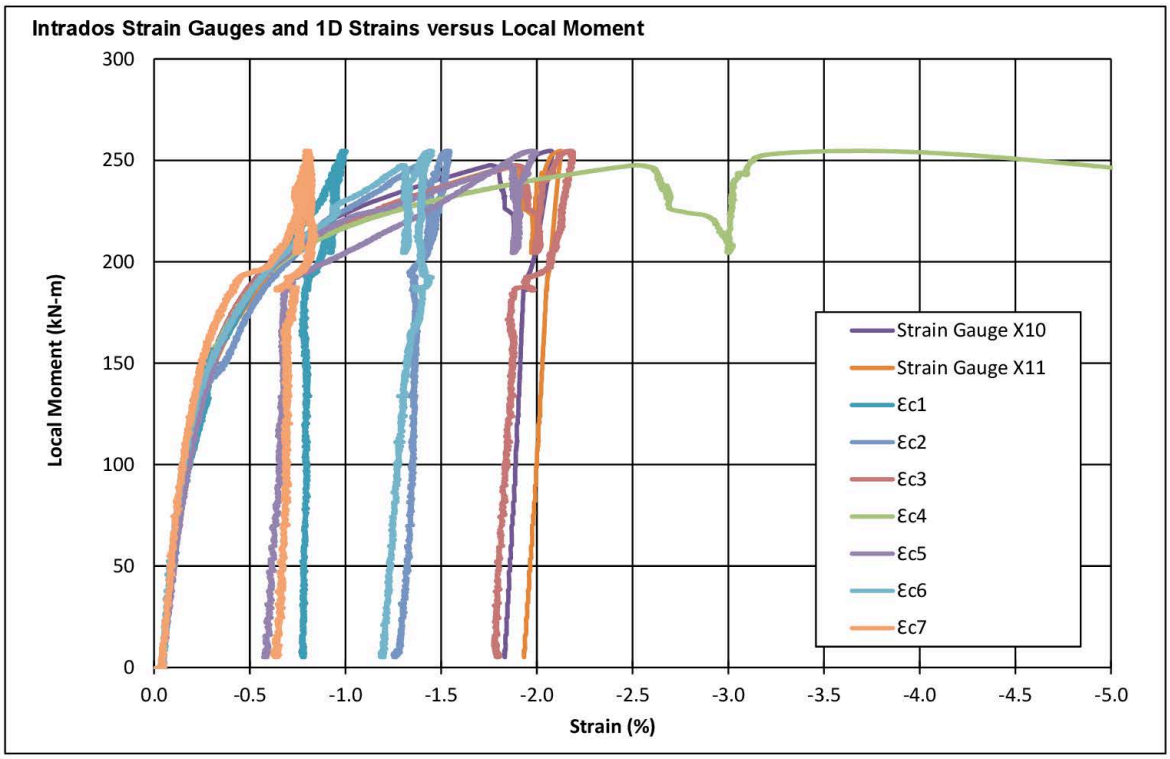

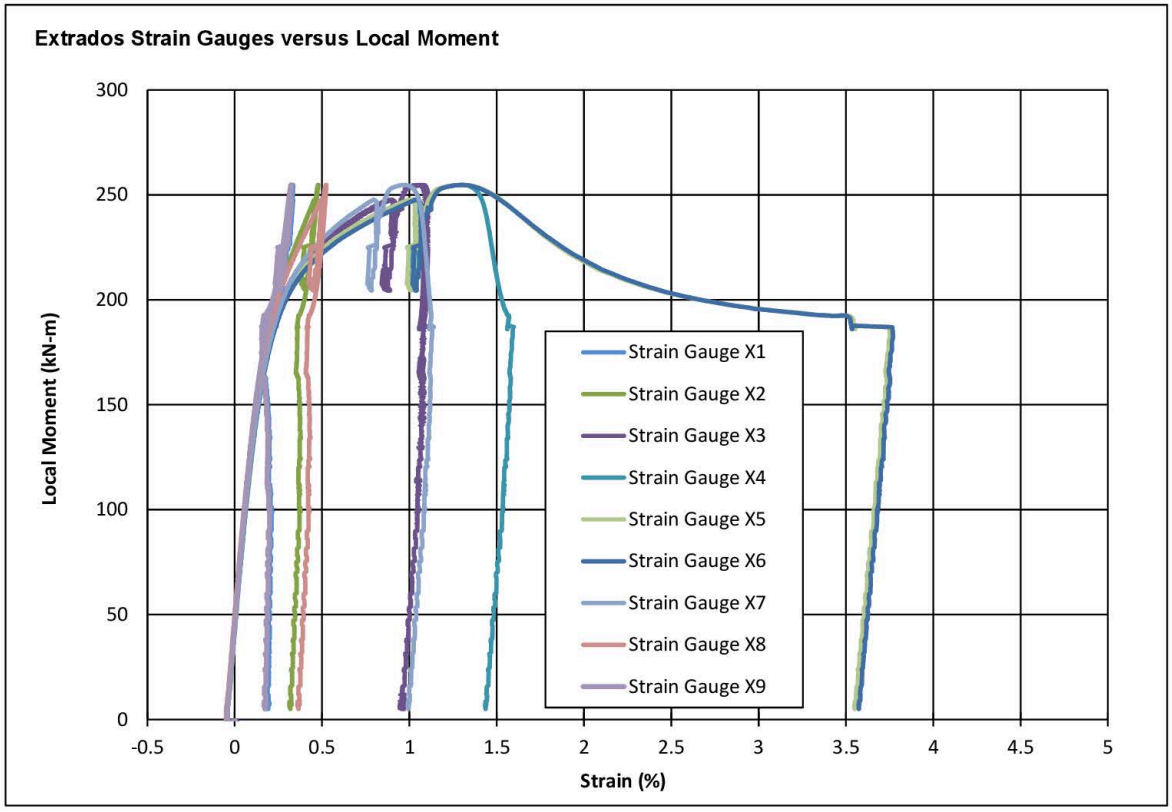

Compiled By:	Date:	Title:	C-FER Technologies
BCA	15-Mar-16	**Task 9.c Bend Test with Dent**	
Reviewed:	Date:	Specimen Identification:	Page 3 of 9
CMJT	5-Apr-17	**9.c.i (Dent 1)**	

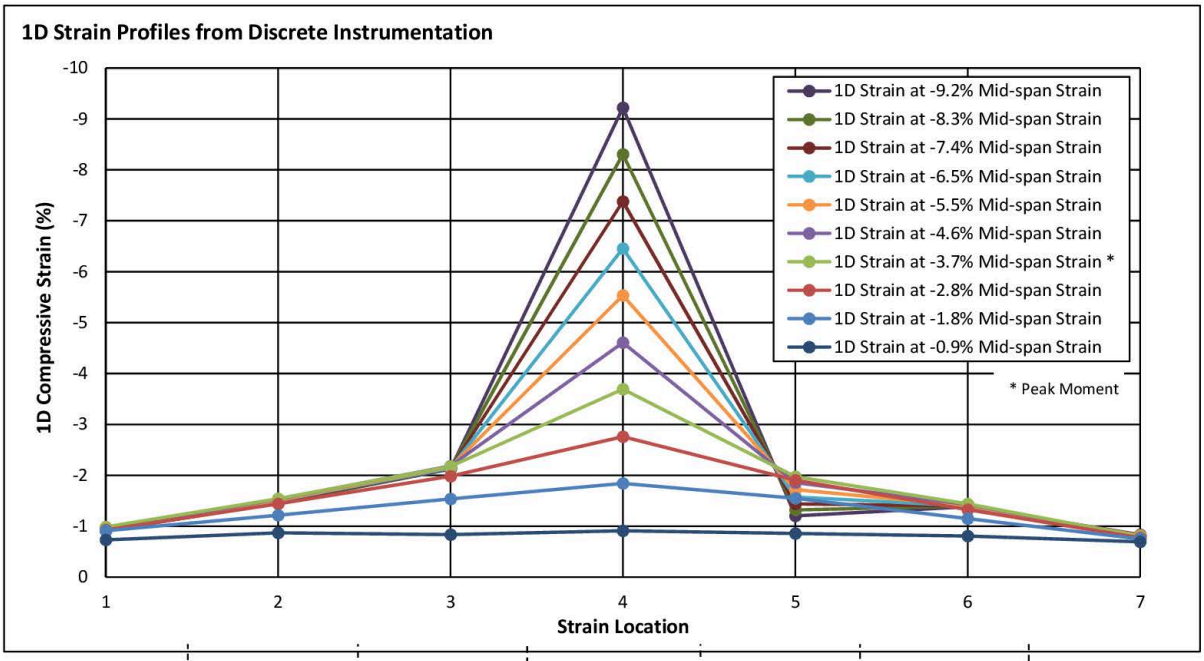

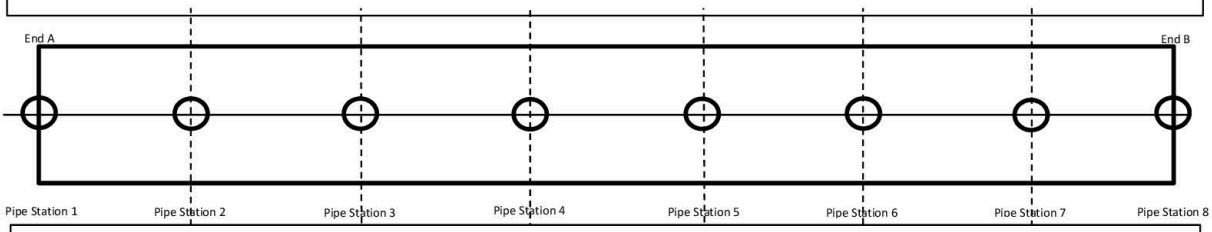

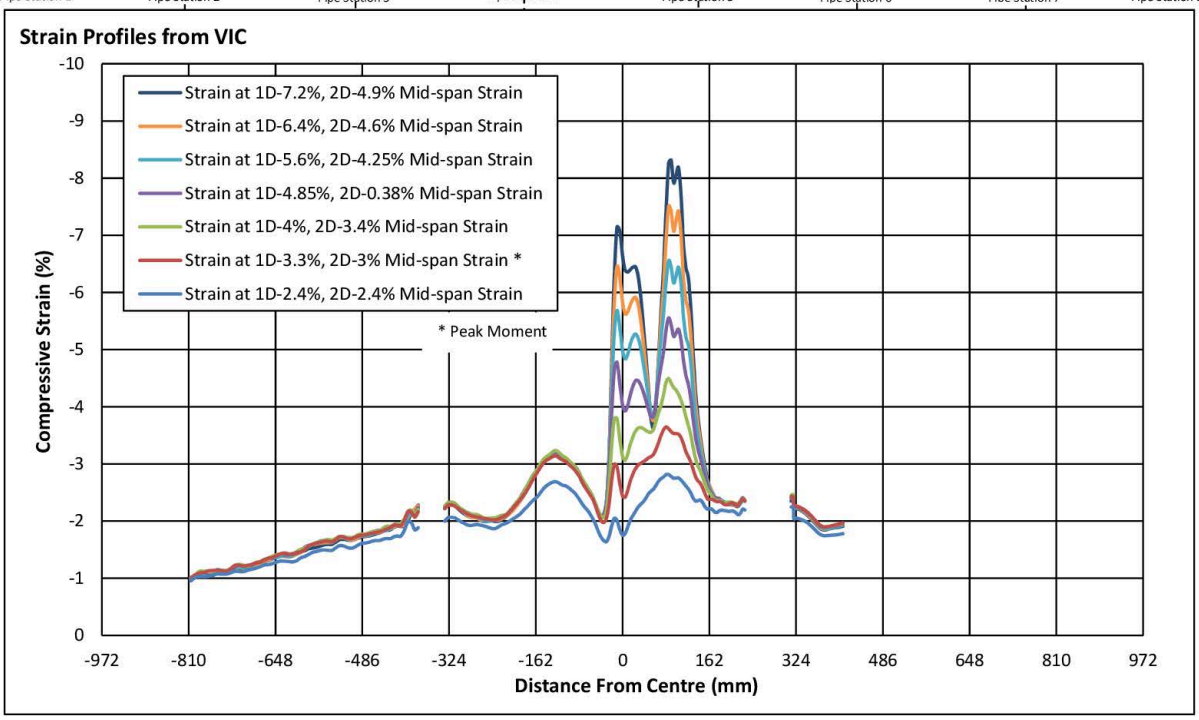

Compiled By:	Date:	Title:	C-FER Technologies
BCA	15-Mar-16	**Task 9.c Bend Test with Dent**	
Reviewed:	Date:	Specimen Identification:	Page 4 of 9
CMJT	5-Apr-17	**9.c.i (Dent 1)**	

Pipe Measurements

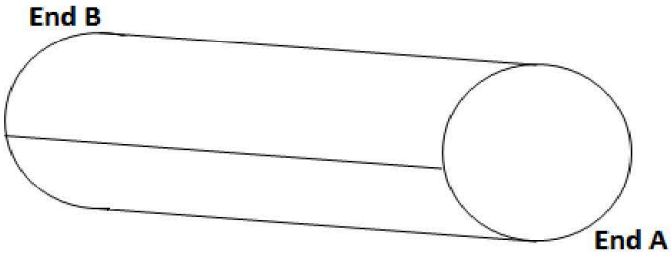

Pipe Specimen

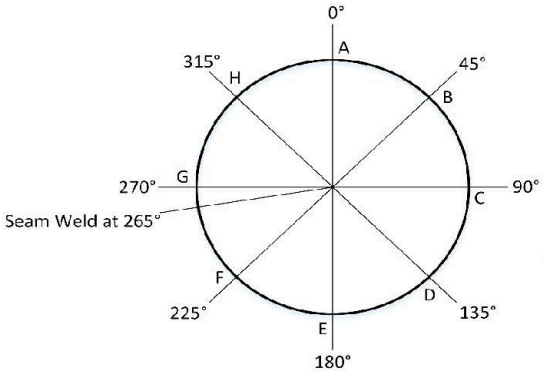

View from End A

Pre test Pup Lengths:

End A to 1	216	mm
1 to 2	322	mm
2 to 3	325	mm
3 to 4	324	mm
4 to 5	325	mm
5 to 6	323	mm
6 to 7	322	mm
7 to 8	326	mm
8 to End B	217	mm
Total Length	2,700	mm

Pre Test Pipe Lengths:

Position B	2,700	mm
Position D	2,701	mm
Position F	2,701	mm
Position H	2,699	mm
Average	2,700	mm

Circumferences:

End A measured circumference	1,020	mm
End B measured circumference	1,020	mm

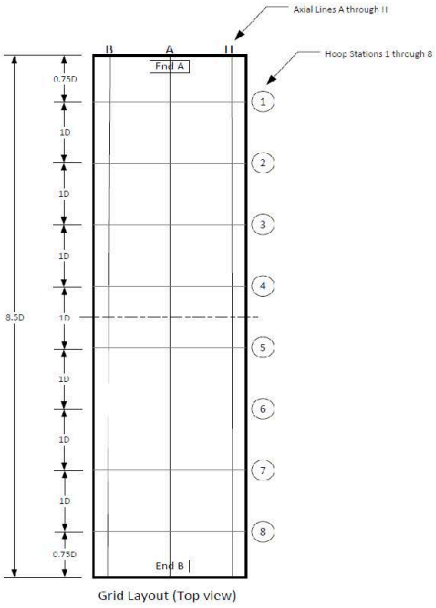

Measurement Grid

Measurements Taken By:	Date:	Title:	C-FER Technologies
TUT	20-Aug-15	**Task 9.c Bend Test with Dent**	
Measurements Approved By:	Date:	Specimen Identification:	Page 5 of 9
JHB	8-Sep-15	**9.c.i (Dent 1)**	

Diameter Measurements

Micrometer:

Verification Rod 1	0.001	in
Verification Rod 2	0.001	in

Diameters in inches (as measured)

Station	Spanned Positions (in)			
	0° to 180°	45° to 225°	90° to 270°	135° to 315°
1	12.785	12.746	12.746	12.775
2	12.797	12.750	12.720	12.750
3	12.799	12.751	12.708	12.746
4	12.798	12.739	12.711	12.740
5	12.814	12.743	12.717	12.757
6	12.817	12.756	12.708	12.735
7	12.815	12.745	12.707	12.756
8	12.786	12.734	12.735	12.766

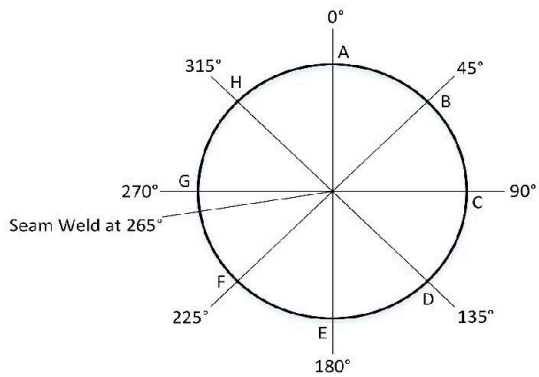

View from End A

Diameters in millimeters (converted)

Station	Spanned Positions (mm)			
	0° to 180°	45° to 225°	90° to 270°	135° to 315°
1	324.74	323.75	323.75	324.49
2	325.04	323.85	323.09	323.85
3	325.09	323.88	322.78	323.75
4	325.07	323.57	322.86	323.60
5	325.48	323.67	323.01	324.03
6	325.55	324.00	322.78	323.47
7	325.50	323.72	322.76	324.00
8	324.76	323.44	323.47	324.26

Station	Max. OD (mm)	@ Position	Min. OD (mm)	@ Position	Average OD (mm)	Standard Deviation (mm)	Ovality* (%)	Ovality incl. angle (°)
1	324.74	0	323.75	45	324.18	0.51	0.31	45
2	325.04	0	323.09	90	323.96	0.81	0.60	90
3	325.09	0	322.78	90	323.88	0.95	0.71	90
4	325.07	0	322.86	90	323.77	0.93	0.68	90
5	325.48	0	323.01	90	324.05	1.04	0.76	90
6	325.55	0	322.78	90	323.95	1.18	0.85	90
7	325.50	0	322.76	90	324.00	1.14	0.85	90
8	324.76	0	323.44	45	323.98	0.64	0.41	45

$$^{*}\ Ovality = \frac{(D_{\max} - D_{\min})}{(D_{nom})} * 100\%$$

Measurements Taken By:	Date:	Title:	C-FER Technologies
MSE	22-May-15	**Task 9.c Bend Test with Dent**	
Measurements Approved By:	Date:	Specimen Identification:	Page 6 of 9
JHB	18-Aug-15	**9.c.i (Dent 1)**	

Diameter Measurements

Micrometer:

Verification Rod 1	0.001	in
Verification Rod 2	0.001	in

Diameters in inches (as measured)

Station	Spanned Positions (in)			
	0° to 180°	45° to 225°	90° to 270°	135° to 315°
1	12.806	12.729	12.731	12.803
2	12.811	12.732	12.708	12.774
3	12.803	12.741	12.710	12.763
4	12.785	12.737	12.720	12.759
5	12.802	12.741	12.727	12.773
6	12.820	12.747	12.710	12.756
7	12.825	12.732	12.704	12.775
8	12.797	12.727	12.728	12.783

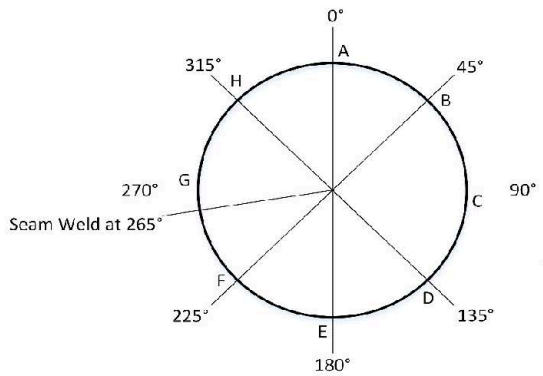

View from End A

Diameters in millimeters (converted)

Station	Spanned Positions (mm)			
	0° to 180°	45° to 225°	90° to 270°	135° to 315°
1	325.27	323.32	323.37	325.20
2	325.40	323.39	322.78	324.46
3	325.20	323.62	322.83	324.18
4	324.74	323.52	323.09	324.08
5	325.17	323.62	323.27	324.43
6	325.63	323.77	322.83	324.00
7	325.76	323.39	322.68	324.49
8	325.04	323.27	323.29	324.69

Station	Max. OD (mm)	@ Position	Min. OD (mm)	@ Position	Average OD (mm)	Standard Deviation (mm)	Ovality* (%)	Ovality incl. angle (°)
1	325.27	0	323.32	45	324.29	1.09	0.60	45
2	325.40	0	322.78	90	324.01	1.16	0.81	90
3	325.20	0	322.83	90	323.96	0.99	0.73	90
4	324.74	0	323.09	90	323.86	0.71	0.51	90
5	325.17	0	323.27	90	324.12	0.85	0.59	90
6	325.63	0	322.83	90	324.06	1.16	0.86	90
7	325.76	0	322.68	90	324.08	1.34	0.95	90
8	325.04	0	323.27	45	324.07	0.93	0.55	45

$$^{*}\ Ovality = \frac{(D_{max} - D_{min})}{(D_{nom})} * 100\%$$

Measurements Taken By:	Date:	Title:	C-FER Technologies
TUT	18-Aug-15	**Task 9.c Bend Test with Dent**	
Measurements Approved By:	Date:	Specimen Identification:	Page 7 of 9
JHB	18-Aug-15	**9.c.i (Dent 1)**	

Wall Thickness Measurements

Micrometer Measurements
Pipe Ring Verification

	Micrometer (mm)	Ultrasonic probe (mm)
End A - Position B	6.380	6.35
End A - Position D	6.300	6.29
End A - Position F	6.350	6.35
End A - Position H	6.350	6.35
End B - Position B	6.350	6.35
End B - Position D	6.300	6.28
End B - Position F	6.320	6.30
End B - Position H	6.360	6.37

Micrometer ID:

Mitutoyo 0-1"
1": 1.00010" Calibration

Ultrasonic Probe ID:
Dakota Ultrasonics MVX
Cal point: 6.34mm

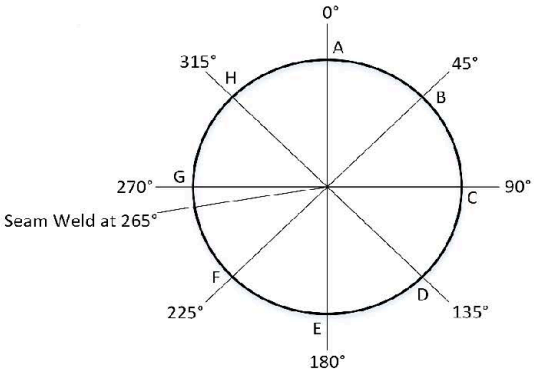

View from End A

Ultrasonic Measurements

Station	Circumferential Position							
	A	B	C	D	E	F	G	H
	Wall Thickness (mm)							
1	6.25	6.32	6.43	6.23	6.24	6.29	6.36	6.36
2	6.30	6.32	6.42	6.24	6.27	6.33	6.37	6.37
3	6.31	6.32	6.46	6.25	6.28	6.31	6.40	6.37
4	6.30	6.34	6.46	6.27	6.28	6.30	6.38	6.35
5	6.27	6.34	6.44	6.24	6.28	6.30	6.35	6.36
6	6.29	6.37	6.44	6.24	6.25	6.33	6.33	6.33
7	6.28	6.32	6.39	6.25	6.27	6.31	6.35	6.36
8	6.26	6.33	6.39	6.24	6.24	6.27	6.32	6.31

Average	6.32 mm
Std. dev	0.06 mm

Measurements Taken By:	Date:	Title:	C-FER Technologies
TUT	18-Aug-15	**Task 9.c Bend Test with Dent**	
Measurements Approved By:	Date:	Specimen Identification:	Page 8 of 9
JHB	8-Sep-15	**9.c.i (Dent 1)**	

Instrumentation Layout

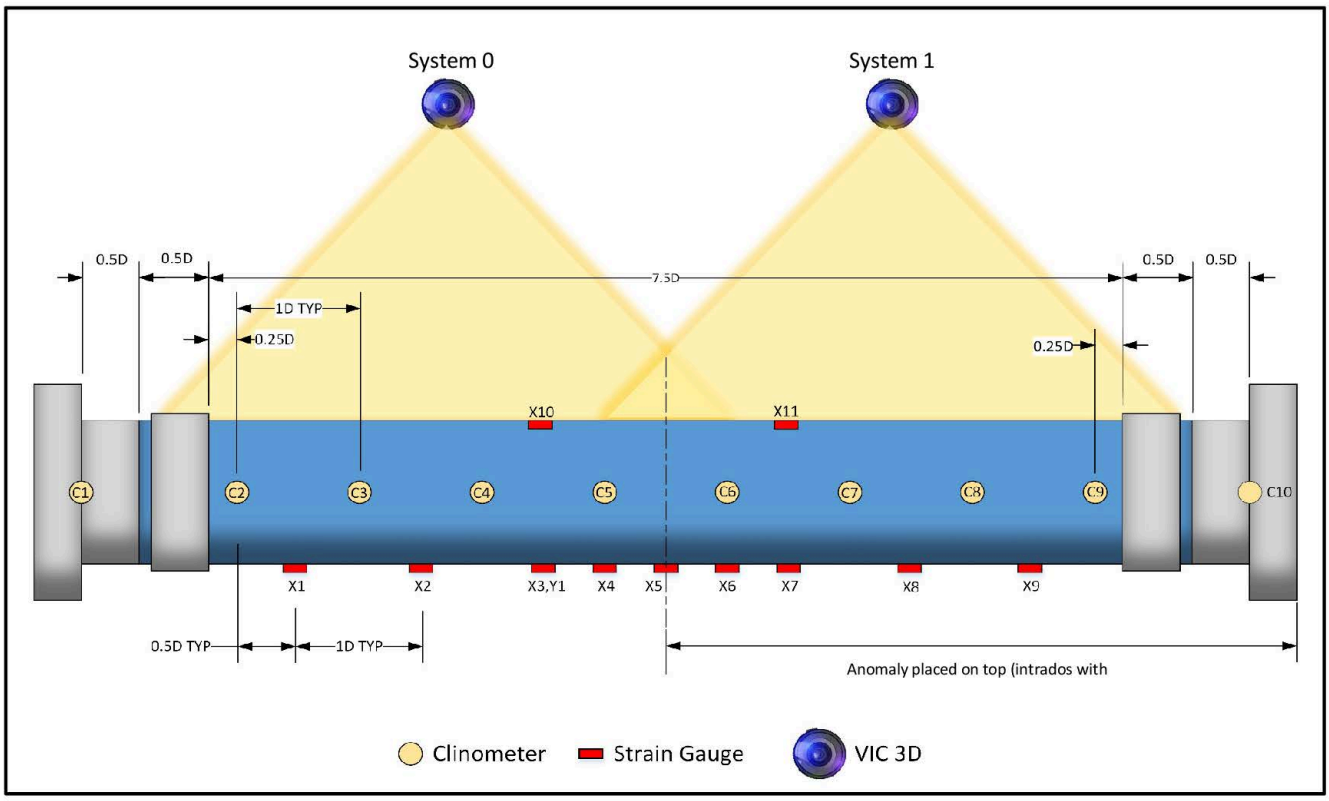

Pre-test Denting and Pressure Cycles

Spherical Indenter Diameter (mm) = 63.5
Indentation Depth (mm) = 10.7 (%OD) = 3.3
Dent Depth After Elastic Rebound (mm) = 5.2 (%OD) = 1.6

	% SMYS	MPa
First Pressure Cycle	0 - 90 - 0	0 - 15.82 - 0
Cycles 2 through 6	10 - 72 - 10	1.76 - 12.65 - 1.76

Dent Depth After Pressure Cycles (mm) = 3.8 (%OD) = 1.2

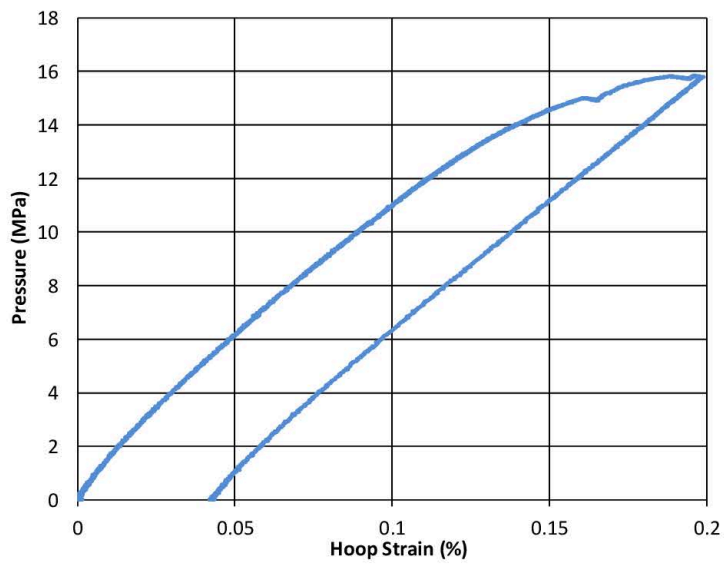

Drawing Done By:	Date:	Title:	C-FER Technologies
BCA	15-Mar-16	**Task 9.c Bend Test with Dent**	
Drawing Approved By:	Date:	Specimen Identification:	Page 9 of 9
CMJT	5-Apr-17	**9.c.i (Dent 1)**	

Task 9.c Bend Test with Dent

Specimen Identification:	**9.c.ii (Dent 2)**	C-FER Test Summary:	**Rev. 2, June 23, 2017**
C-FER Specimen Number:	**X65-ERW-1-1-9CII**	Test Date:	**October 1, 2015**

Nominal Pipe Characteristics

Nominal OD (mm) =	323.85
Average OD (mm) =	323.97
Nominal Wall Thickness (mm) =	6.35
Average Wall Thickness (mm) =	6.34
Specimen Length (mm) =	2713
Length/OD =	8.4
SMYS (MPa) =	448

Test Loading Procedure

1. The specimen was pressurized to 90% SMYS then 5 cycles of 72%.
2. The specimen was pressurized to 72% SMYS while applying compressive force to compensate for the end cap load.
3. The specimen was bent to the maximum displacement possible within the test frame.

Test Parameters

Target Net Pressure (MPa) =	12.65
Test Average Net Pressure (MPa) =	12.65

Test Results

Peak End Moment (kN-m) =	168
Peak Local Moment* (kN-m) =	249

Strains Across Buckle at Peak Moment

1D Strain - Discrete (%) =	-2.9
1D Strain - VIC (%) =	-2.5
2D Strain - VIC (%) =	-2.3

Anomaly - Dent midspan intrados 63.5mm diameter ball

Indentation Depth (mm) =	24.1
Original Dent Depth (mm) =	13.6
Dent Depth After Pressure Cycles (mm) =	8.9

Failure Mode

Outward buckle approximately 63mm from specimen midpoint

*Local Moment taken at specimen midpoint

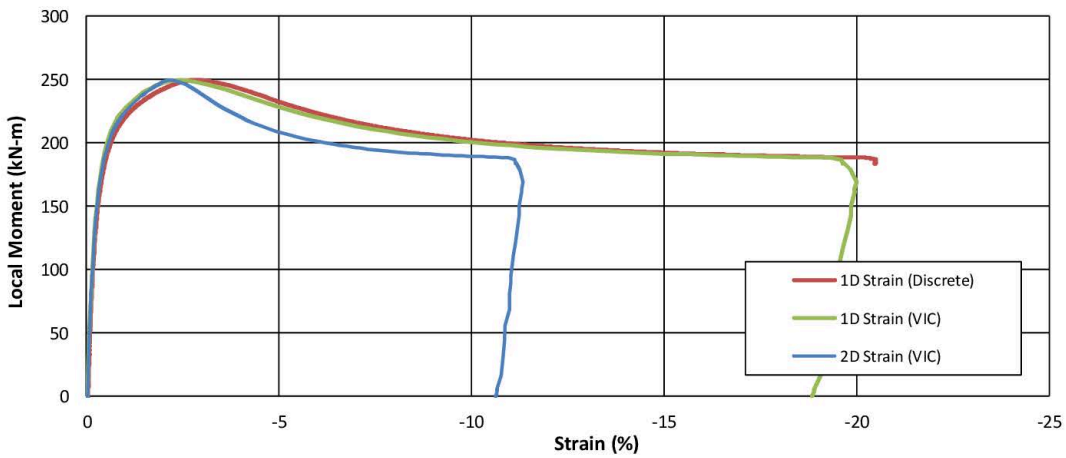

General Comments:

Post Test:

		Title: **Task 9.c Bend Test with Dent**	C-FER Technologies
Reviewed: CMJT	Date: 23-Jun-17	Specimen Identification: **9.c.ii (Dent 2)**	Page 1 of 9

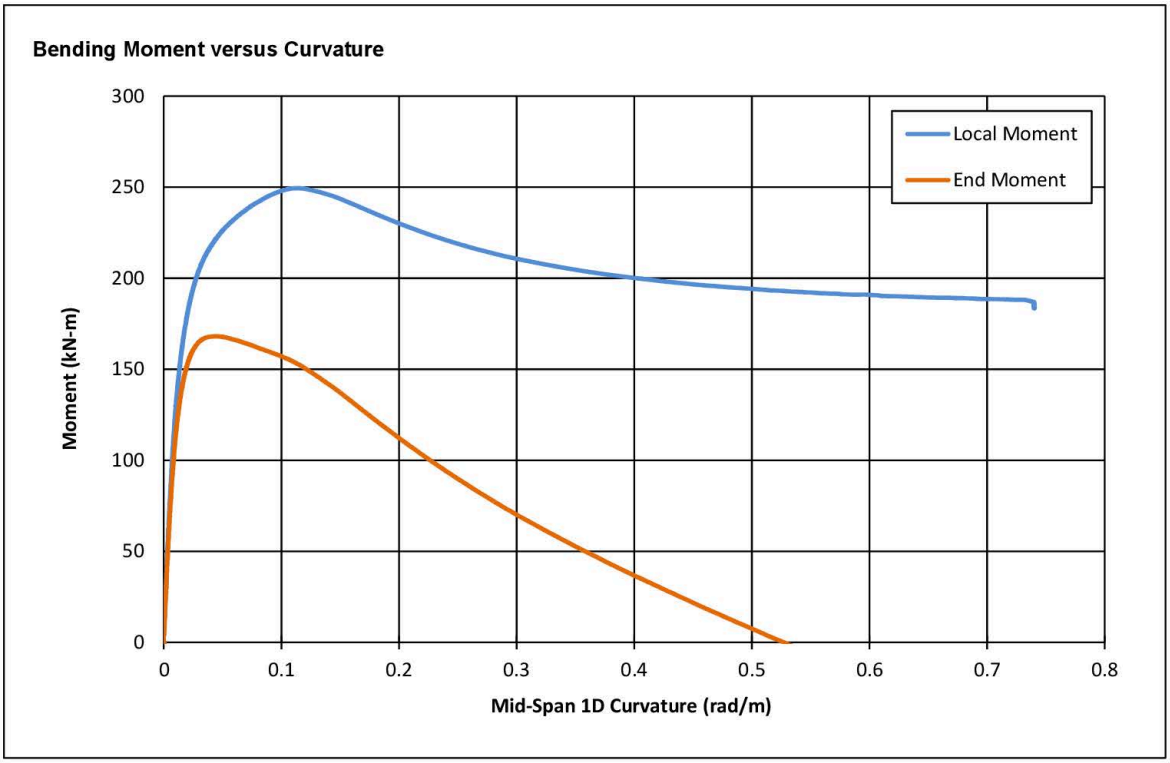

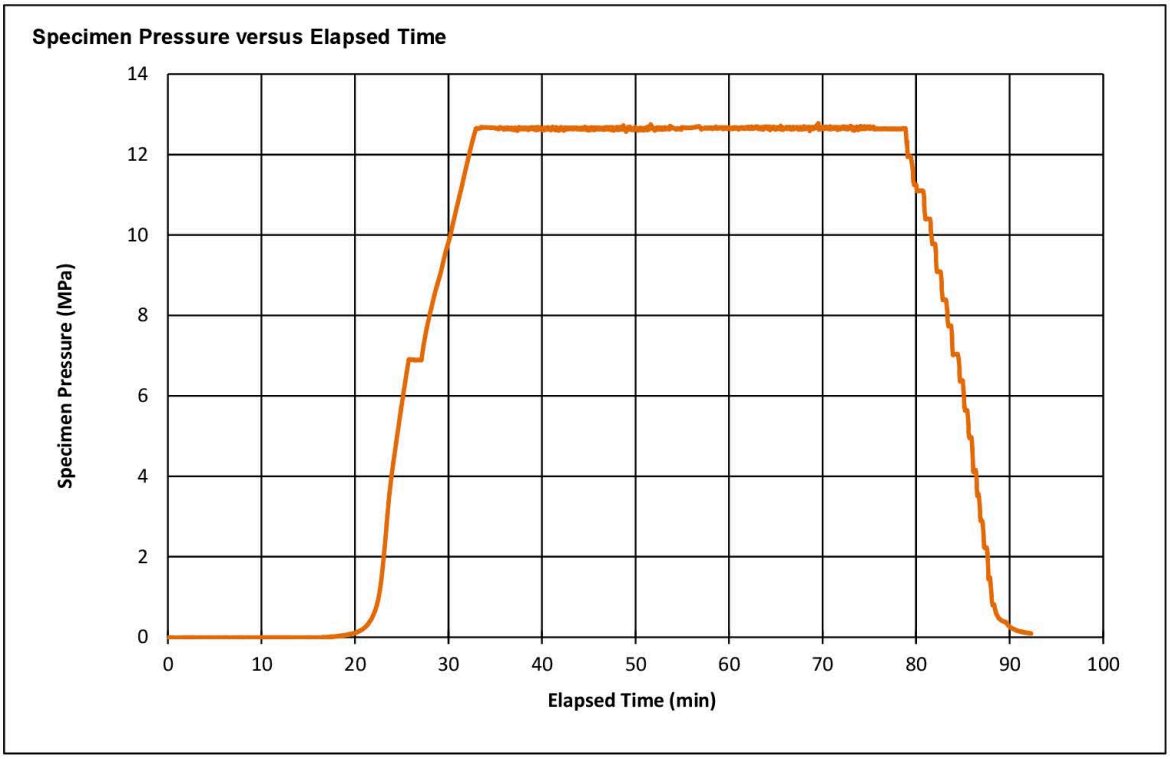

Compiled By:	Date:	Title:	C-FER Technologies
BCA	15-Mar-16	**Task 9.c Bend Test with Dent**	
Reviewed:	Date:	Specimen Identification:	Page 2 of 9
CMJT	5-Apr-17	**9.c.ii (Dent 2)**	

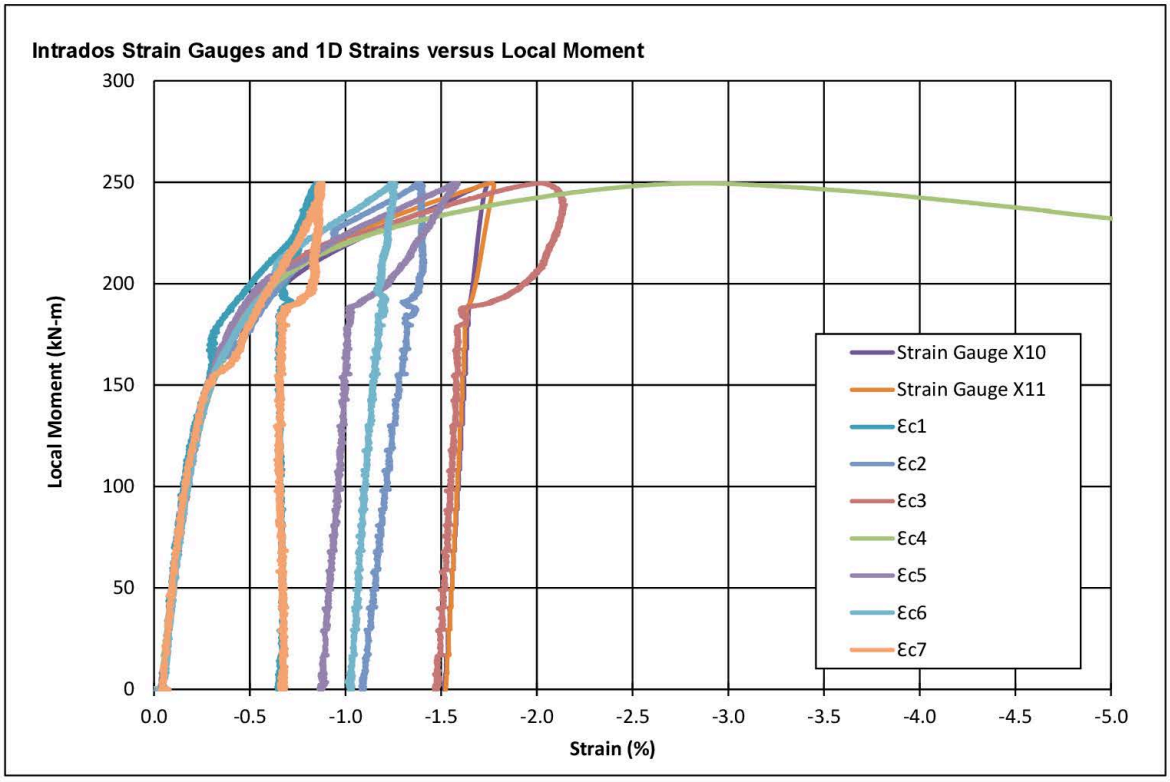

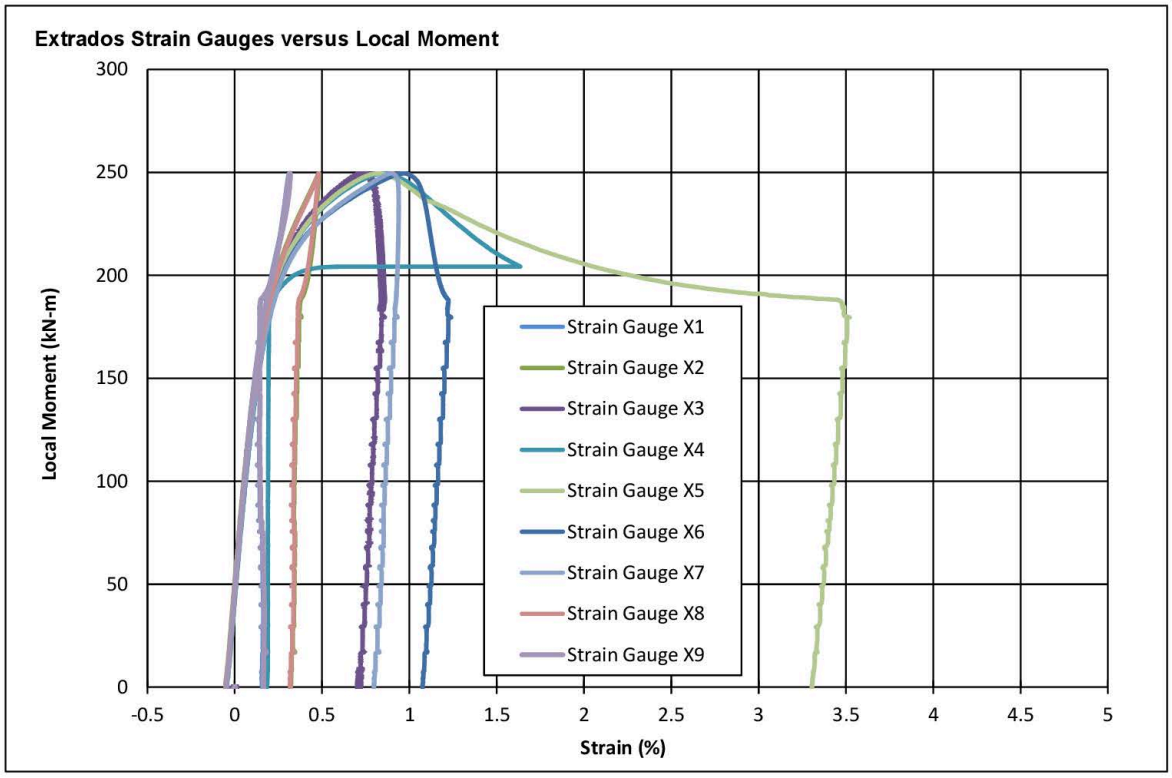

Compiled By:	Date:	Title:	C-FER Technologies
BCA	29-Mar-16	**Task 9.c Bend Test with Dent**	
Reviewed:	Date:	Specimen Identification:	Page 3 of 9
CMJT	5-Apr-17	**9.c.ii (Dent 2)**	

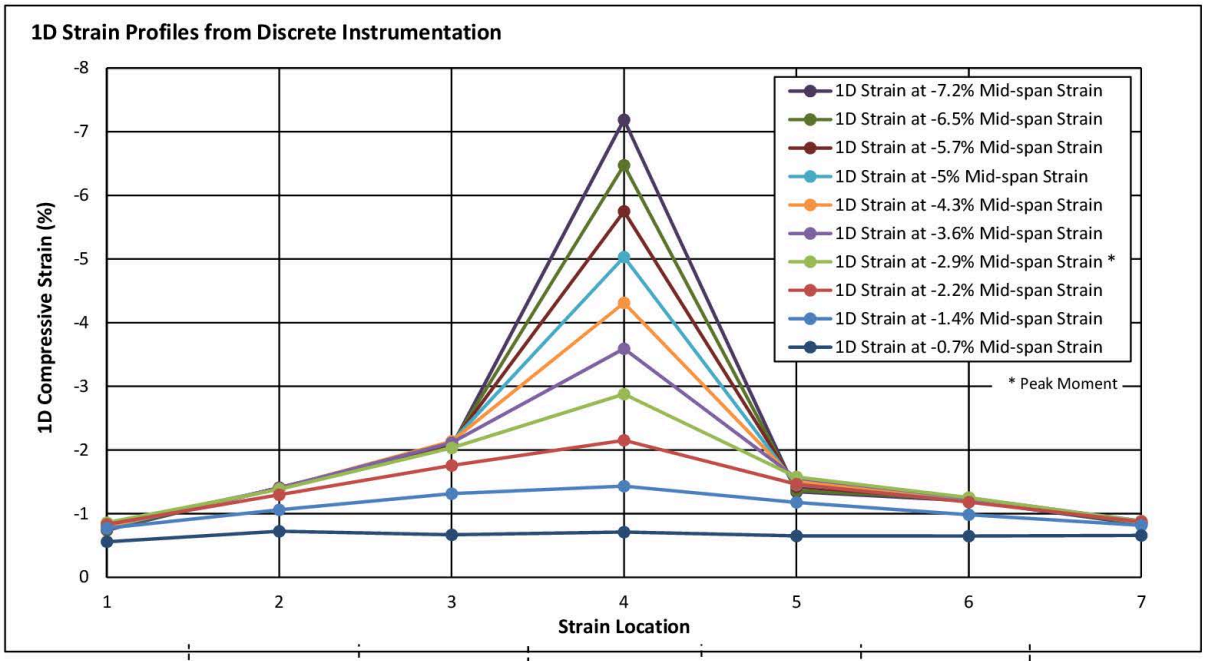

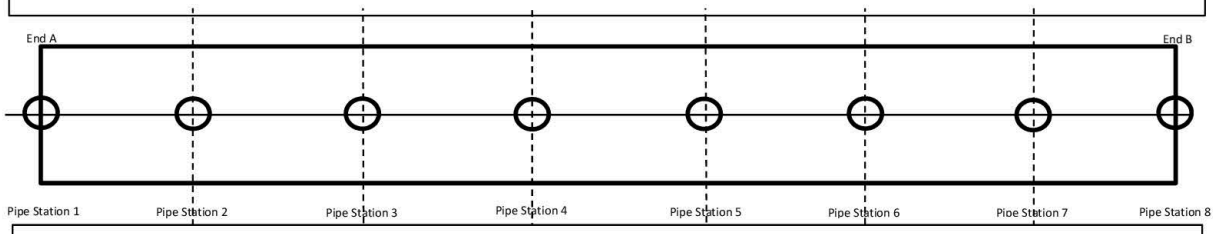

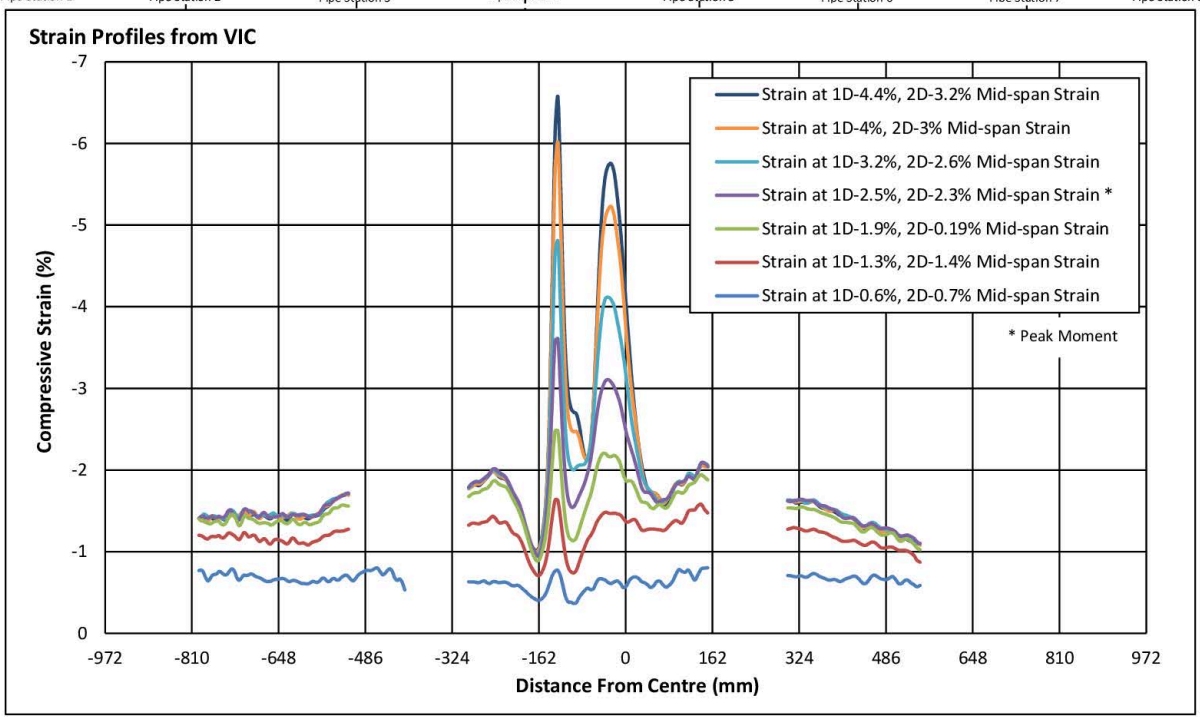

Compiled By:	Date:	Title:	C-FER Technologies
BCA	29-Mar-16	**Task 9.c Bend Test with Dent**	
Reviewed:	Date:	Specimen Identification:	Page 4 of 9
CMJT	5-Apr-17	**9.c.ii (Dent 2)**	

Pipe Measurements

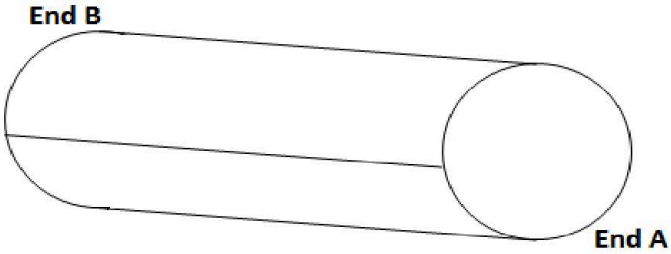

Pipe Specimen

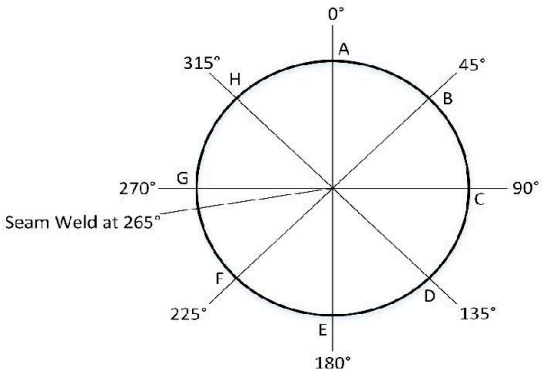

View from End A

Pre test Pup Lengths:

End A to 1	224	mm
1 to 2	323	mm
2 to 3	325	mm
3 to 4	325	mm
4 to 5	323	mm
5 to 6	324	mm
6 to 7	323	mm
7 to 8	324	mm
8 to End B	224	mm
Total Length	2 715	mm

Pre Test Pipe Lengths:

Position B	2 715	mm
Position D	2 713	mm
Position F	2 713	mm
Position H	2 711	mm
Average	2 713	mm

Circumferences:

End A measured circumference	1 020	mm
End B measured circumference	1 019	mm

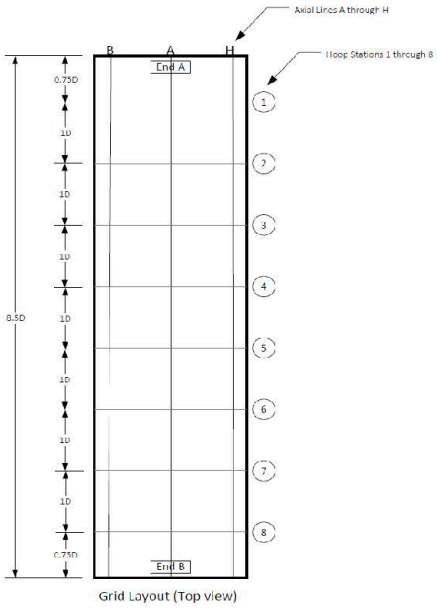

Measurement Grid

Measurements Taken By:	Date:	Title:	C-FER Technologies
TCT	8-Sep-15	**Task 9.c Bend Test with Dent**	
Measurements Approved By:	Date:	Specimen Identification:	Page 5 of 9
JHB	30-Sep-15	**9.c.ii (Dent 2)**	

Diameter Measurements

Micrometer:

Verification Rod 1	0.001	in
Verification Rod 2	0.001	in

Diameters in inches (as measured)

Station	Spanned Positions (in)			
	0° to 180°	45° to 225°	90° to 270°	135° to 315°
1	12.800	12.747	12.730	12.747
2	12.813	12.747	12.714	12.752
3	12.807	12.728	12.721	12.776
4	12.792	12.728	12.726	12.762
5	12.804	12.736	12.713	12.747
6	12.812	12.745	12.714	12.751
7	12.809	12.724	12.725	12.783
8	12.787	12.721	12.725	12.761

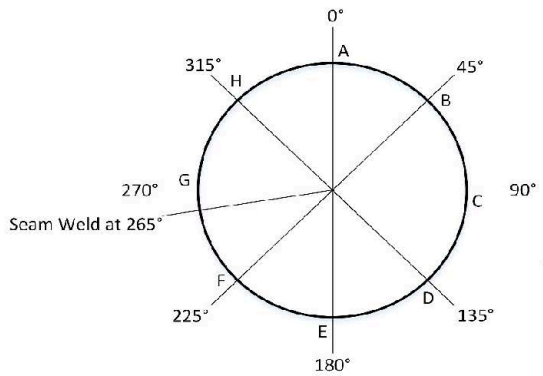

View from End A

Diameters in millimeters (converted)

Station	Spanned Positions (mm)			
	0° to 180°	45° to 225°	90° to 270°	135° to 315°
1	325.12	323.77	323.34	323.77
2	325.45	323.77	322.94	323.90
3	325.30	323.29	323.11	324.51
4	324.92	323.29	323.24	324.15
5	325.22	323.49	322.91	323.77
6	325.42	323.72	322.94	323.88
7	325.35	323.19	323.22	324.69
8	324.79	323.11	323.22	324.13

Station	Max. OD (mm)	@ Position	Min. OD (mm)	@ Position	Average OD (mm)	Standard Deviation (mm)	Ovality* (%)	Ovality incl. angle (°)
1	325.12	0	323.34	90	324.00	0.77	0.55	90
2	325.45	0	322.94	90	324.02	1.05	0.78	90
3	325.30	0	323.11	90	324.05	1.04	0.67	90
4	324.92	0	323.24	90	323.90	0.80	0.52	90
5	325.22	0	322.91	90	323.85	0.98	0.71	90
6	325.42	0	322.94	90	323.99	1.04	0.77	90
7	325.35	0	323.19	45	324.11	1.08	0.67	45
8	324.79	0	323.11	45	323.81	0.80	0.52	45

$$^{*}\ Ovality = \frac{(D_{\max} - D_{\min})}{(D_{nom})} * 100\%$$

Measurements Taken By:	Date:	Title:	C-FER Technologies
MSE	25-May-15	**Task 9.c Bend Test with Dent**	
Measurements Approved By:	Date:	Specimen Identification:	Page 6 of 9
JHB	30-Sep-15	**9.c.ii (Dent 2)**	

Diameter Measurements

Micrometer:

Verification Rod 1	0.001	in
Verification Rod 2	0.001	in

Diameters in inches (as measured)

Station	Spanned Positions (in)			
	0° to 180°	45° to 225°	90° to 270°	135° to 315°
1	12.810	12.764	12.723	12.743
2	12.818	12.756	12.710	12.748
3	12.797	12.732	12.735	12.780
4	12.743	12.745	12.760	12.773
5	12.755	12.748	12.749	12.762
6	12.799	12.745	12.732	12.755
7	12.810	12.721	12.725	12.790
8	12.796	12.727	12.721	12.766

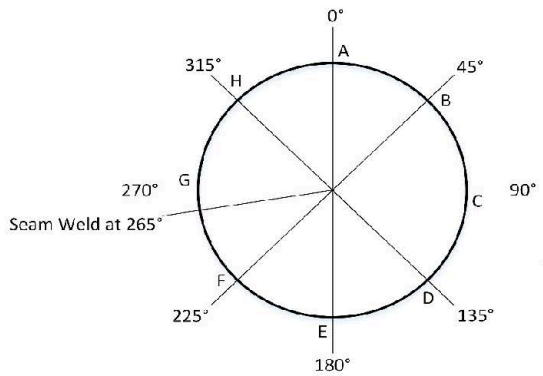

View from End A

Diameters in millimeters (converted)

Station	Spanned Positions (mm)			
	0° to 180°	45° to 225°	90° to 270°	135° to 315°
1	325.37	324.21	323.16	323.67
2	325.58	324.00	322.83	323.80
3	325.04	323.39	323.47	324.61
4	323.67	323.72	324.10	324.43
5	323.98	323.80	323.82	324.15
6	325.09	323.72	323.39	323.98
7	325.37	323.11	323.22	324.87
8	325.02	323.27	323.11	324.26

Station	Max. OD (mm)	@ Position	Min. OD (mm)	@ Position	Average OD (mm)	Standard Deviation (mm)	Ovality* (%)	Ovality incl. angle (°)
1	325.37	0	323.16	90	324.10	0.95	0.68	90
2	325.58	0	322.83	90	324.05	1.14	0.85	90
3	325.04	0	323.39	45	324.13	0.83	0.51	45
4	324.43	135	323.67	0	323.98	0.36	0.24	135
5	324.15	135	323.80	45	323.94	0.16	0.11	90
6	325.09	0	323.39	90	324.05	0.74	0.53	90
7	325.37	0	323.11	45	324.14	1.15	0.70	45
8	325.02	0	323.11	90	323.91	0.89	0.59	90

$$^{*}\ Ovality = \frac{(D_{\max} - D_{\min})}{(D_{nom})} * 100\%$$

Measurements Taken By:	Date:	Title:	C-FER Technologies
TCT	9-Sep-15	**Task 9.c Bend Test with Dent**	
Measurements Approved By:	Date:	Specimen Identification:	Page 7 of 9
JHB	30-Sep-15	**9.c.ii (Dent 2)**	

Wall Thickness Measurements

Micrometer Measurements
Pipe Ring Verification

	Micrometer (mm)	Ultrasonic probe (mm)
End A - Position B	6.326	6.32
End A - Position D	6.271	6.28
End A - Position F	6.281	6.26
End A - Position H	6.348	6.33
End B - Position B	6.368	6.36
End B - Position D	6.311	6.31
End B - Position F	6.299	6.31
End B - Position H	6.350	6.34

Micrometer ID:

Mitutoyo 0-1" (Labelled HTS)
Calibration (1"): 1(0.3"): 0.30000"

Ultrasonic Probe ID:
Dakota Ultrasonics MVX ±0.001"
Cal One Point: 6.33mm

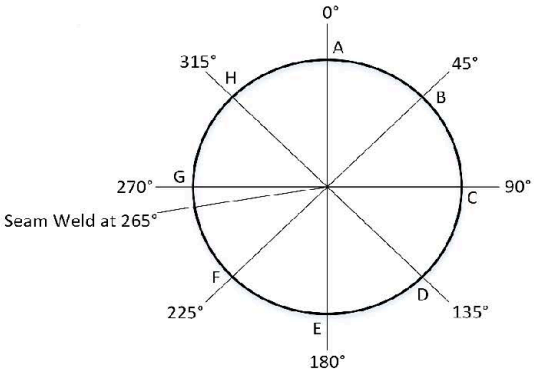

View from End A

Ultrasonic Measurements

Station	Circumferential Position							
	A	B	C	D	E	F	G	H
	Wall Thickness (mm)							
1	6.28	6.33	6.38	6.24	6.26	6.26	6.41	6.37
2	6.30	6.35	6.39	6.29	6.27	6.27	6.43	6.39
3	6.33	6.38	6.46	6.31	6.32	6.33	6.48	6.40
4	6.34	6.37	6.43	6.32	6.30	6.31	6.47	6.38
5	6.33	6.34	6.42	6.32	6.33	6.33	6.45	6.36
6	6.32	6.36	6.42	6.30	6.31	6.31	6.40	6.33
7	6.33	6.33	6.44	6.28	6.29	6.28	6.37	6.35
8	6.32	6.30	6.39	6.27	6.29	6.26	6.36	6.33

Average	6.34 mm
Std. dev	0.06 mm

Measurements Taken By:	Date:	Title:	C-FER Technologies
TCT	8-Sep-15	**Task 9.c Bend Test with Dent**	
Measurements Approved By:	Date:	Specimen Identification:	Page 8 of 9
JHB	30-Sep-15	**9.c.ii (Dent 2)**	

Instrumentation Layout

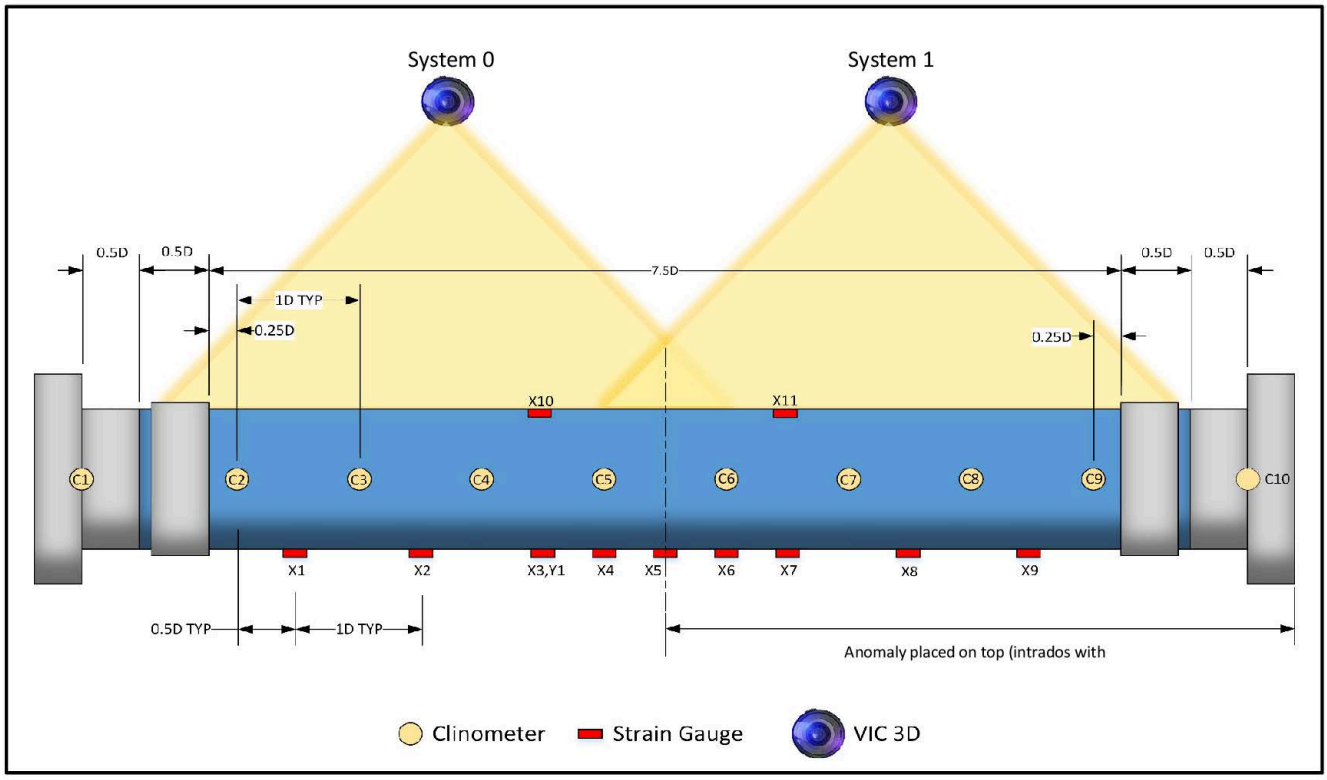

Pre-test Denting and Pressure Cycles

Spherical Indenter Diameter (mm) = 63.5
Indentation Depth (mm) = 24.1 (%OD) = 7.4
Dent Depth After Elastic Rebound (mm) = 13.6 (%OD) = 4.2

	% SMYS	MPa
First Pressure Cycle	0 - 90 - 0	0 - 15.82 - 0
Cycles 2 through 6	10 - 72 - 10	1.76 - 12.65 - 1.76

Dent Depth After Pressure Cycles (mm) = 8.9 (%OD) = 2.7

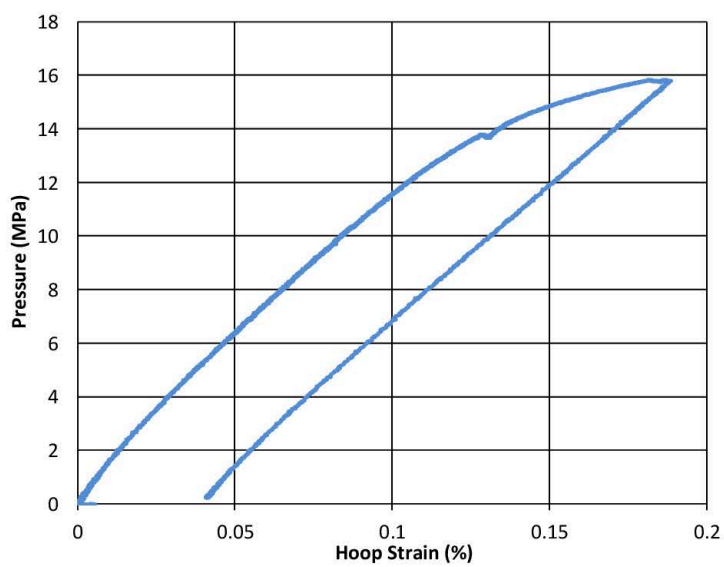

Drawing Done By:	Date:	Title:	C-FER Technologies
BCA	29-Mar-16	**Task 9.c Bend Test with Dent**	
Drawing Approved By:	Date:	Specimen Identification:	Page 9 of 9
CMJT	5-Apr-17	**9.c.ii (Dent 2)**	

Task 9.c Bend Test with Dent

Specimen Identification:	**9.c.iii (Dent 3)**	C-FER Test Summary:	**Rev. 2, June 23, 2017**
C-FER Specimen Number:	**X65-ERW-1-1-9CIII**	Test Date:	**October 9, 2015**

Nominal Pipe Characteristics

Nominal OD (mm) =	323.85
Average OD (mm) =	323.96
Nominal Wall Thickness (mm) =	6.35
Average Wall Thickness (mm) =	6.39
Specimen Length (mm) =	2701
Length/OD =	8.3
SMYS (MPa) =	448

Test Loading Procedure

1. The specimen was pressurized to 90% SMYS and 5 cycles of 72%.
2. The specimen was pressurized to 72% SMYS while applying compressive force to compensate for the end cap load.
3. The specimen was bent to the maximum displacement possible within the test frame.

Test Parameters

Target Net Pressure (MPa) =	12.65
Test Average Net Pressure (MPa) =	12.65

Test Results

Peak End Moment (kN-m) =	172
Peak Local Moment* (kN-m) =	249

Strains Across Buckle at Peak Moment

1D Strain - Discrete (%) =	-2.1
1D Strain - VIC (%) =	-2.3
2D Strain - VIC (%) =	-2.1

Anomaly - Dent midspan intrados 63.5mm diameter ball

Indentation Depth (mm) =	60.2
Original Dent Depth (mm) =	43.1
Dent Depth After Pressure Cycles (mm) =	17.8

Failure Mode

Outward buckle approximately 48 mm from specimen midpoint

*Local Moment taken at specimen midpoint

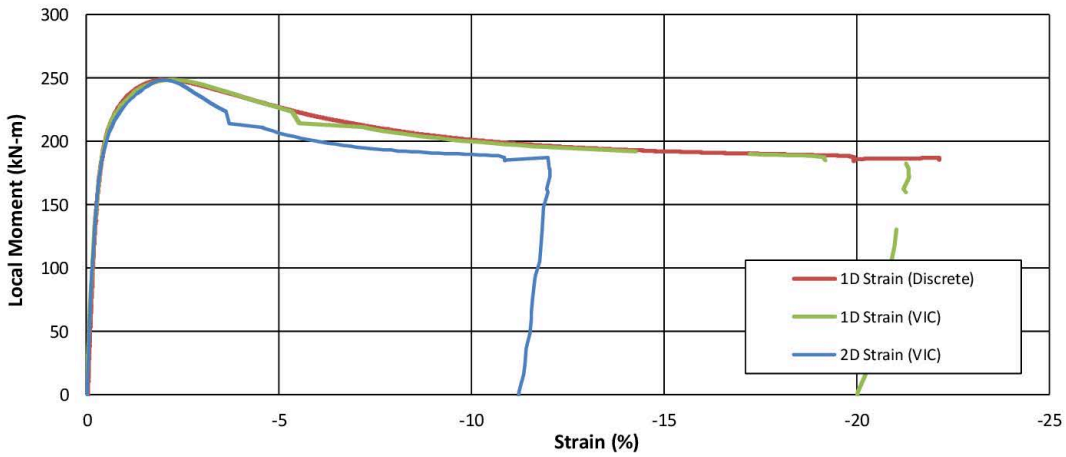

General Comments:

Post Test:

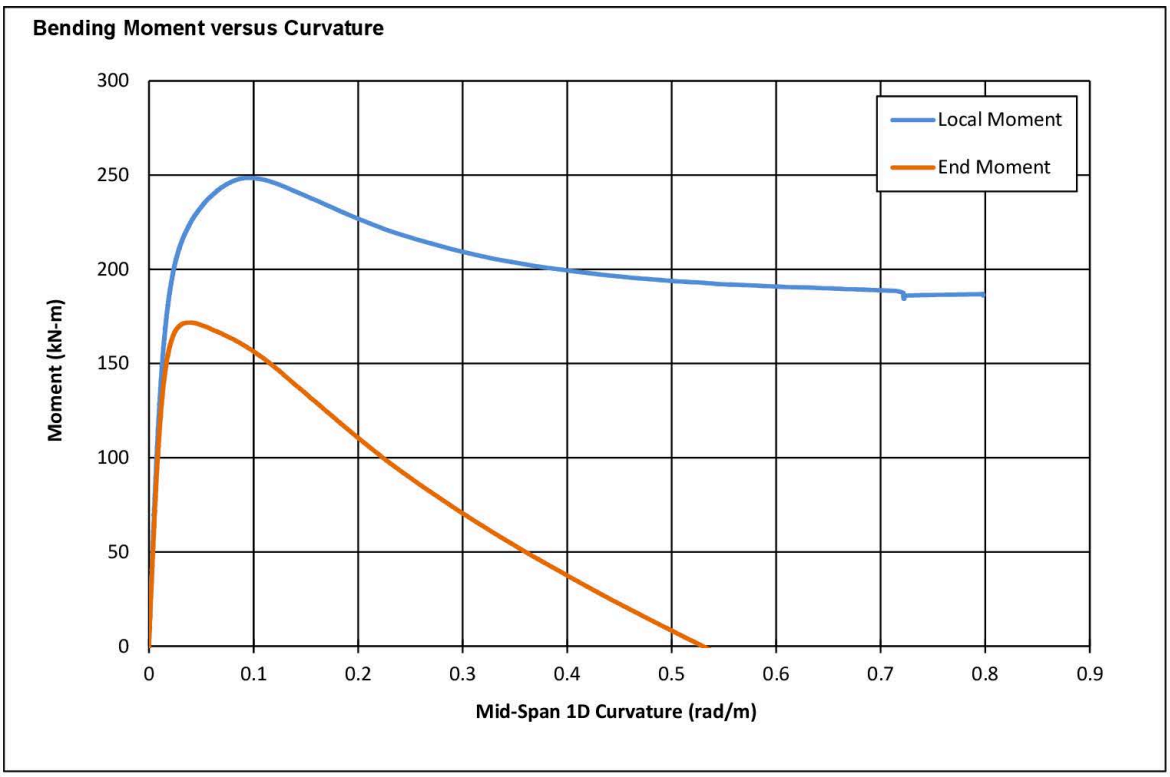

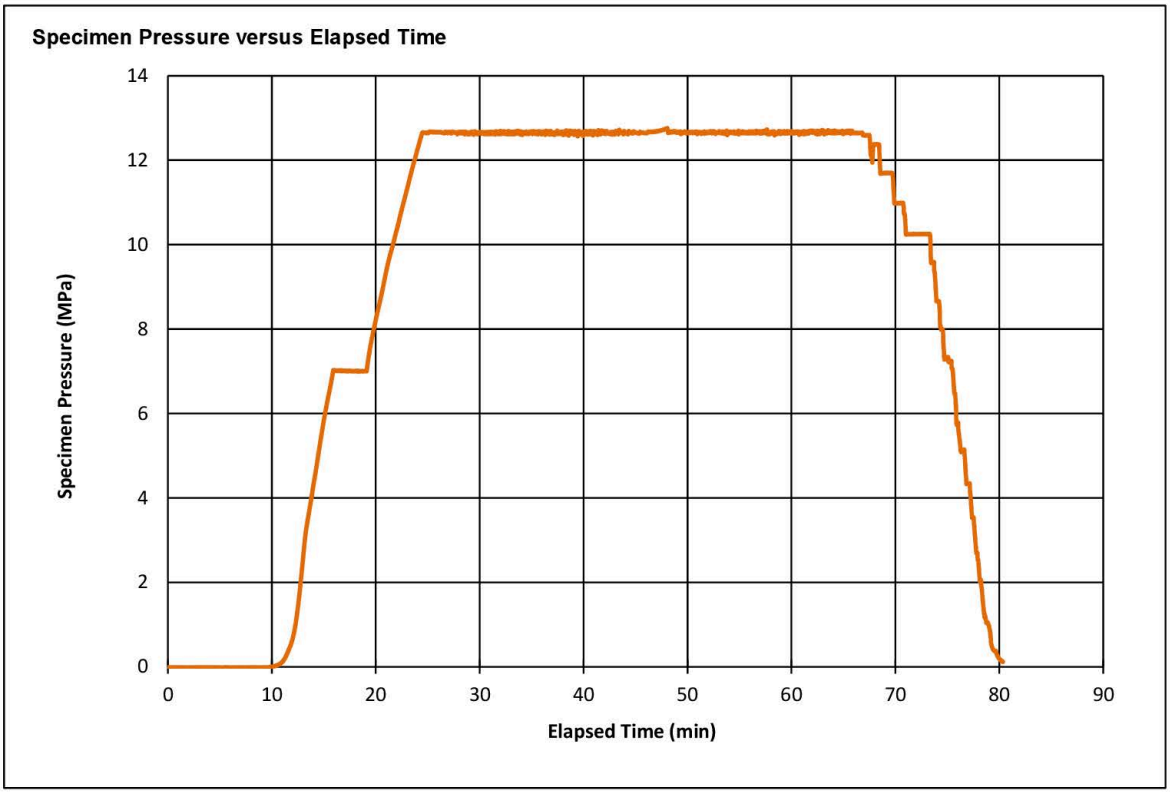

Compiled By:	Date:	Title:	C-FER Technologies
BCA	25-Aug-15	**Task 9.c Bend Test with Dent**	
Reviewed:	Date:	Specimen Identification:	Page 2 of 9
CMJT	5-Apr-17	**9.c.iii (Dent 3)**	

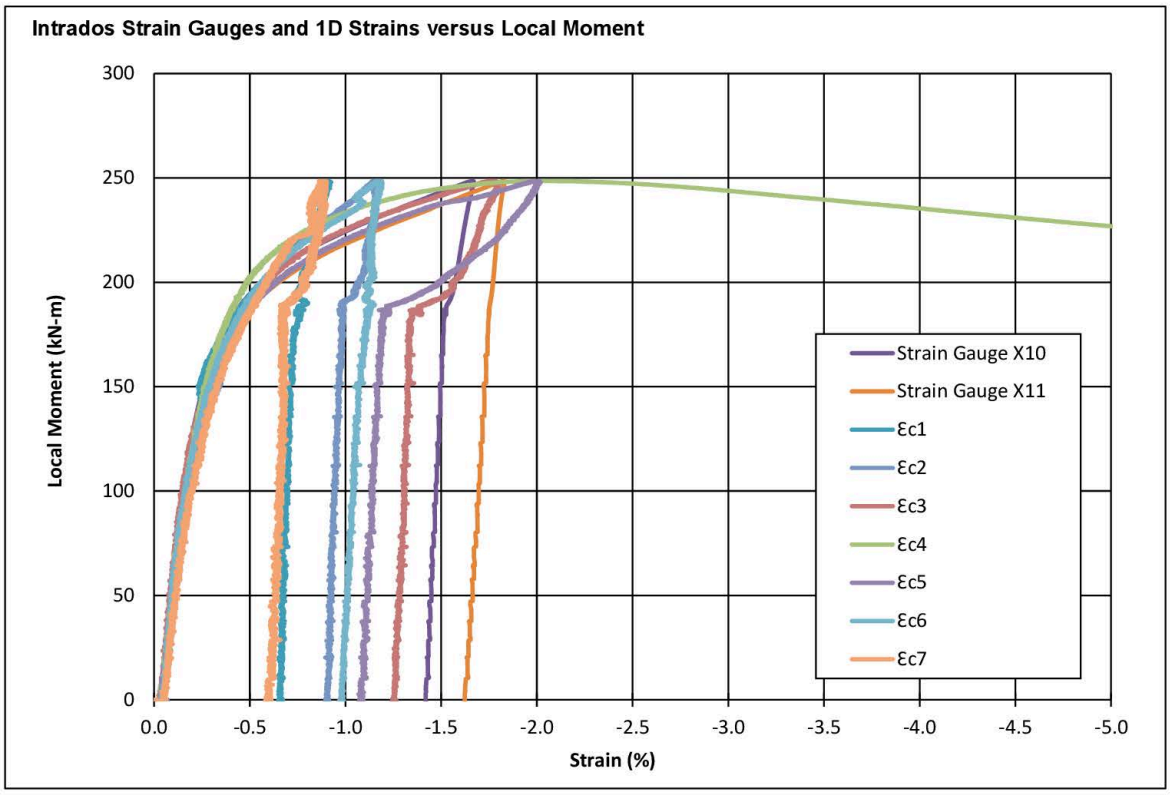

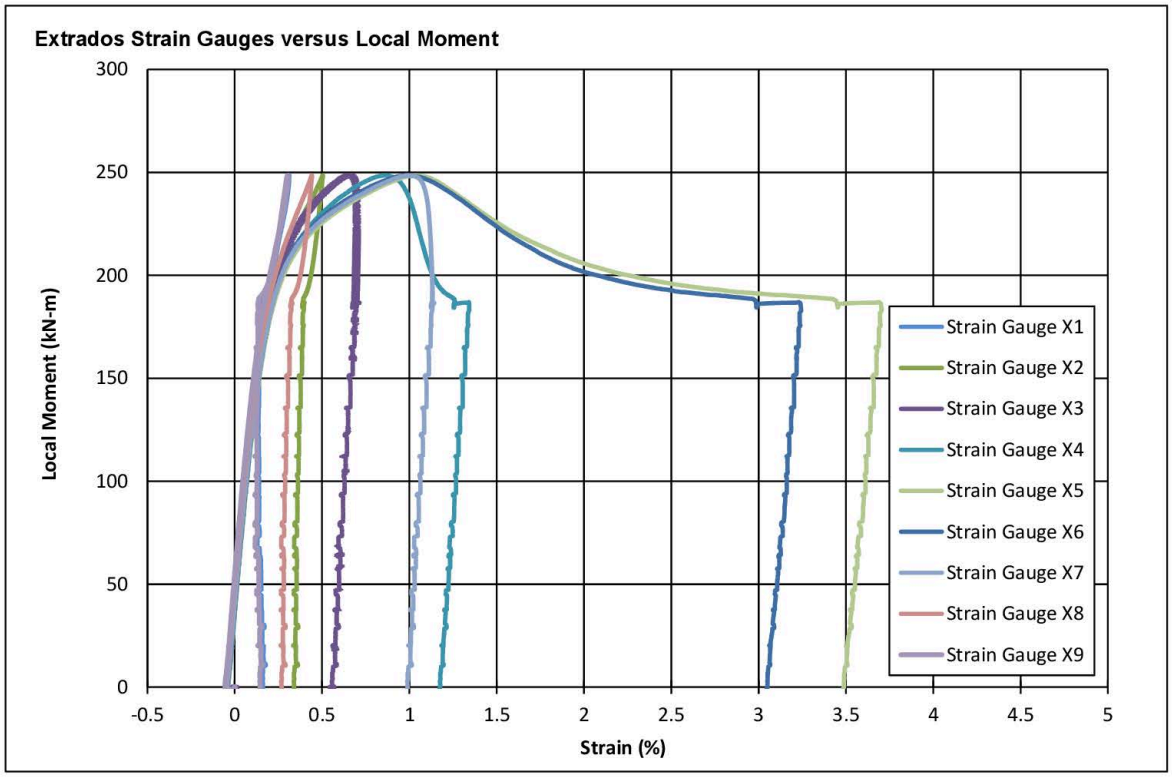

Compiled By:	Date:	Title:	C-FER Technologies
BCA	4-Apr-17	**Task 9.c Bend Test with Dent**	
Reviewed:	Date:	Specimen Identification:	Page 3 of 9
CMJT	5-Apr-17	**9.c.iii (Dent 3)**	

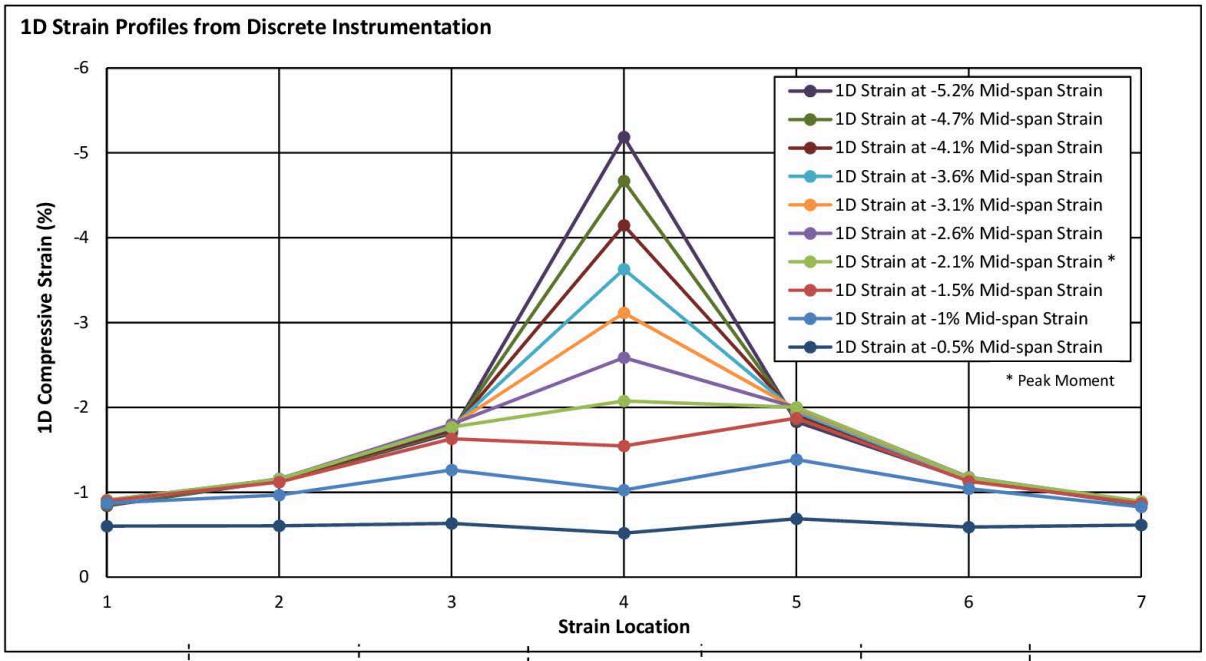

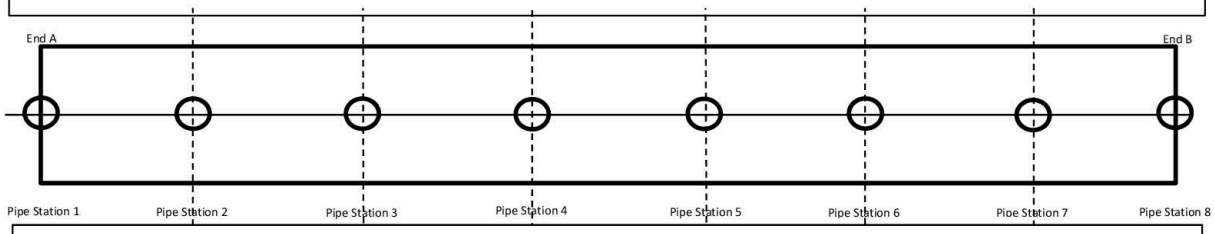

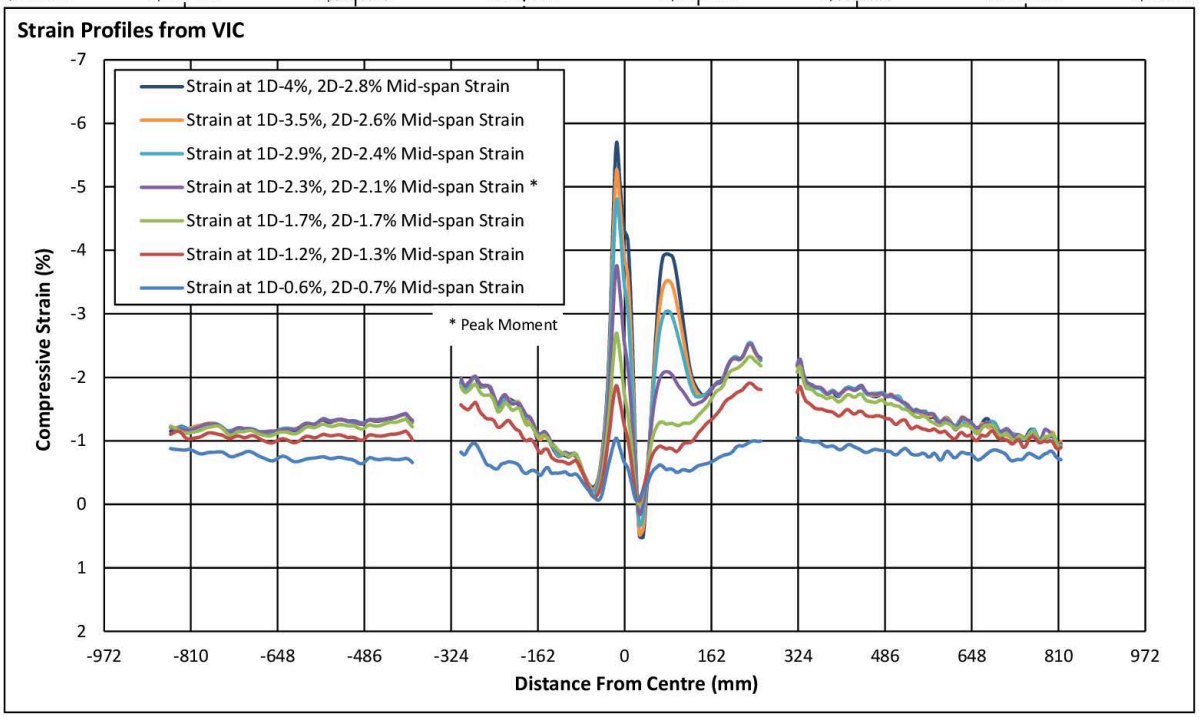

Compiled By:	Date:	Title:	C-FER Technologies
BCA	4-Apr-17	**Task 9.c Bend Test with Dent**	
Reviewed:	Date:	Specimen Identification:	Page 4 of 9
CMJT	5-Apr-17	**9.c.iii (Dent 3)**	

Pipe Measurements

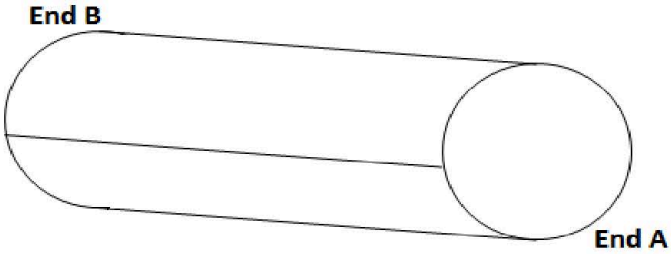

Pipe Specimen

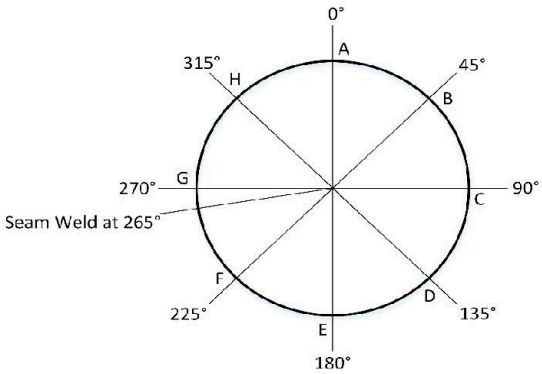

View from End A

Pre test Pup Lengths:

End A to 1	218	mm
1 to 2	323	mm
2 to 3	327	mm
3 to 4	322	mm
4 to 5	325	mm
5 to 6	322	mm
6 to 7	324	mm
7 to 8	322	mm
8 to End B	219	mm
Total Length	2 702	mm

Pre Test Pipe Lengths:

Position B	2 702	mm
Position D	2 700	mm
Position F	2 700	mm
Position H	2 701	mm
Average	2 701	mm

Circumferences:

End A measured circumference	1 020	mm
End B measured circumference	1 020	mm

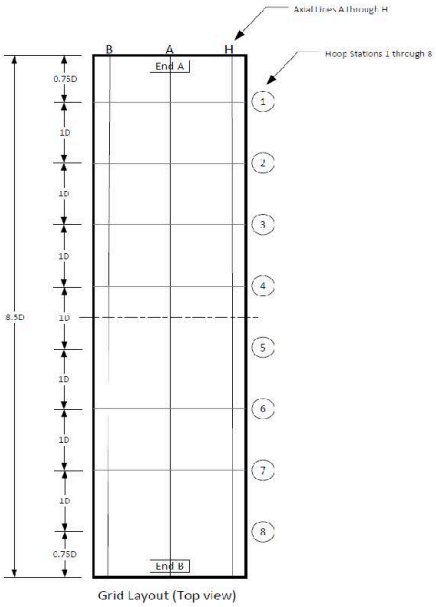

Measurement Grid

Measurements Taken By:	Date:	Title:	C-FER Technologies
TCT	Sep. 4, 2015	**Task 9.c Bend Test with Dent**	
Measurements Approved By:	Date:	Specimen Identification:	Page 5 of 9
JHB	6-Oct-15	**9.c.iii (Dent 3)**	

Diameter Measurements

Micrometer:

Verification Rod 1	0.001	in
Verification Rod 2	0.001	in

Diameters in inches (as measured)

Station	Spanned Positions (in)			
	0° to 180°	45° to 225°	90° to 270°	135° to 315°
1	12.796	12.729	12.731	12.759
2	12.811	12.737	12.728	12.777
3	12.805	12.741	12.712	12.750
4	12.797	12.734	12.719	12.755
5	12.797	12.720	12.721	12.773
6	12.815	12.725	12.726	12.780
7	12.812	12.732	12.710	12.759
8	12.786	12.727	12.723	12.752

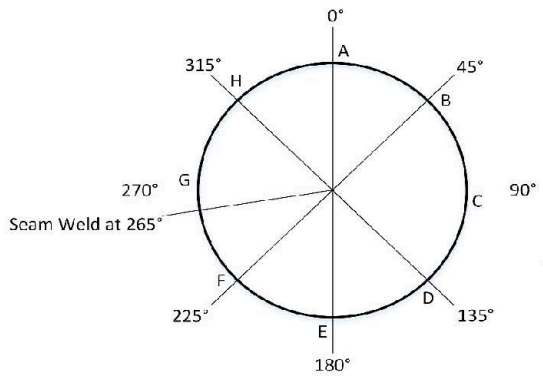

View from End A

Diameters in millimeters (converted)

Station	Spanned Positions (mm)			
	0° to 180°	45° to 225°	90° to 270°	135° to 315°
1	325.02	323.32	323.37	324.08
2	325.40	323.52	323.29	324.54
3	325.25	323.62	322.88	323.85
4	325.04	323.44	323.06	323.98
5	325.04	323.09	323.11	324.43
6	325.50	323.22	323.24	324.61
7	325.42	323.39	322.83	324.08
8	324.76	323.27	323.16	323.90

Station	Max. OD (mm)	@ Position	Min. OD (mm)	@ Position	Average OD (mm)	Standard Deviation (mm)	Ovality* (%)	Ovality incl. angle (°)
1	325.02	0	323.32	45	323.95	0.80	0.53	45
2	325.40	0	323.29	90	324.19	0.97	0.65	90
3	325.25	0	322.88	90	323.90	0.99	0.73	90
4	325.04	0	323.06	90	323.88	0.86	0.61	90
5	325.04	0	323.09	45	323.92	0.98	0.60	45
6	325.50	0	323.22	45	324.14	1.12	0.71	45
7	325.42	0	322.83	90	323.93	1.12	0.80	90
8	324.76	0	323.16	90	323.77	0.74	0.49	90

$$^{*}\ Ovality = \frac{(D_{max} - D_{min})}{(D_{nom})} * 100\%$$

Measurements Taken By:	Date:	Title:	C-FER Technologies
TUT	18-Aug-15	**Task 9.c Bend Test with Dent**	
Measurements Approved By:	Date:	Specimen Identification:	Page 6 of 9
JHB	18-Aug-15	**9.c.iii (Dent 3)**	

Diameter Measurements

Micrometer:

Verification Rod 1	0.001	in
Verification Rod 2	0.001	in

Diameters in inches (as measured)

Station	Spanned Positions (in)			
	0° to 180°	45° to 225°	90° to 270°	135° to 315°
1	12.836	12.733	12.797	12.760
2	12.802	12.742	12.758	12.783
3	12.668	12.743	12.847	12.758
4	12.414	12.794	12.964	12.820
5	12.435	12.780	12.958	12.831
6	12.721	12.730	12.844	12.782
7	12.792	12.735	12.729	12.765
8	12.840	12.729	12.686	12.756

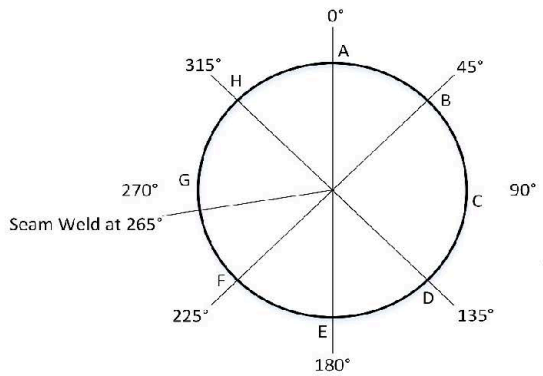

View from End A

Diameters in millimeters (converted)

Station	Spanned Positions (mm)			
	0° to 180°	45° to 225°	90° to 270°	135° to 315°
1	326.03	323.42	325.04	324.10
2	325.17	323.65	324.05	324.69
3	321.77	323.67	326.31	324.05
4	315.32	324.97	329.29	325.63
5	315.85	324.61	329.13	325.91
6	323.11	323.34	326.24	324.66
7	324.92	323.47	323.32	324.23
8	326.14	323.32	322.22	324.00

Station	Max. OD (mm)	@ Position	Min. OD (mm)	@ Position	Average OD (mm)	Standard Deviation (mm)	Ovality* (%)	Ovality incl. angle (°)
1	326.03	0	323.42	45	324.65	1.14	0.81	45
2	325.17	0	323.65	45	324.39	0.67	0.47	45
3	326.31	90	321.77	0	323.95	1.87	1.40	90
4	329.29	90	315.32	0	323.80	5.97	4.31	90
5	329.13	90	315.85	0	323.88	5.68	4.10	90
6	326.24	90	323.11	0	324.34	1.44	0.96	90
7	324.92	0	323.32	90	323.98	0.74	0.49	90
8	326.14	0	322.22	90	323.92	1.65	1.21	90

$$^{*}\ Ovality = \frac{(D_{\max} - D_{\min})}{(D_{nom})} * 100\%$$

Measurements Taken By:	Date:	Title:	C-FER Technologies
TCT	4-Sep-15	**Task 9.c Bend Test with Dent**	
Measurements Approved By:	Date:	Specimen Identification:	Page 7 of 9
JHB	7-Oct-15	**9.c.iii (Dent 3)**	

Wall Thickness Measurements

Micrometer Measurements
Pipe Ring Verification

	Micrometer (mm)	Ultrasonic probe (mm)
End A - Position B	6.333	6.34
End A - Position D	6.294	6.30
End A - Position F	6.347	6.33
End A - Position H	6.346	6.32
End B - Position B	6.361	6.35
End B - Position D	6.304	6.29
End B - Position F	6.321	6.35
End B - Position H	6.356	6.38

Micrometer ID:
Mitutoyo 0-1"
Calibration (1"): 1.00010"
(0.2"): 0.20000" (0.3"): 0.30000"

Ultrasonic Probe ID:
Model Dakota Ultrasonics MVX ±0.001"
Cal point: 6.34in

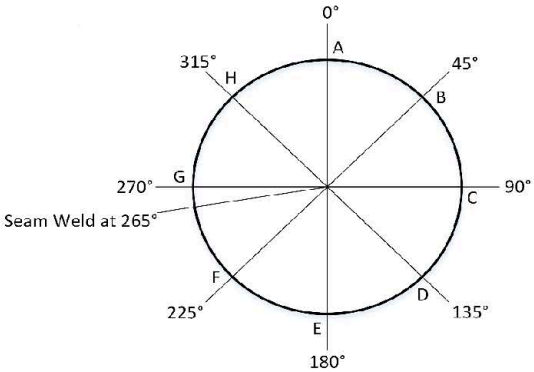

View from End A

Ultrasonic Measurements

Station	Circumferential Position							
	A	B	C	D	E	F	G	H
	Wall Thickness (mm)							
1	6.38	6.4	6.45	6.29	6.35	6.34	6.45	6.37
2	6.38	6.4	6.48	6.31	6.36	6.35	6.51	6.41
3	6.39	6.41	6.5	6.33	6.38	6.36	6.44	6.43
4	6.37	6.4	6.49	6.34	6.35	6.32	6.51	6.46
5	6.32	6.39	6.5	6.32	6.36	6.34	6.53	6.41
6	6.35	6.38	6.49	6.31	6.36	6.32	6.49	6.44
7	6.36	6.4	6.49	6.34	6.34	6.34	6.47	6.46
8	6.36	6.35	6.46	6.31	6.33	6.33	6.43	6.39

Average	6.39 mm
Std. dev	0.06 mm

Measurements Taken By:	Date:	Title:	C-FER Technologies
TCT	4-Sep-15	**Task 9.c Bend Test with Dent**	
Measurements Approved By:	Date:	Specimen Identification:	Page 8 of 9
JHB	7-Oct-15	**9.c.iii (Dent 3)**	

Instrumentation Layout

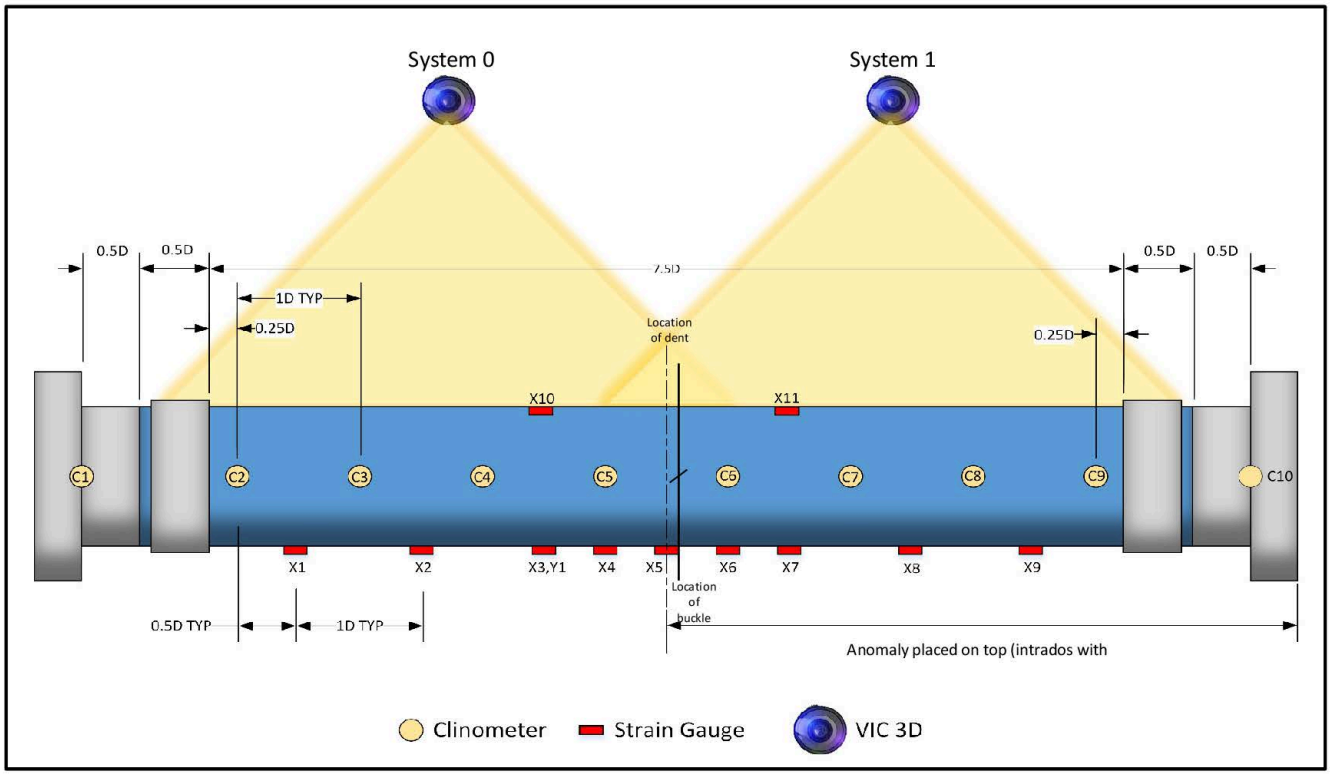

Pre-test Denting and Pressure Cycles

Spherical Indenter Diameter (mm) = 63.5
Indentation Depth (mm) = 60.2 (%OD) = 18.6
Dent Depth After Elastic Rebound (mm) = 43.1 (%OD) = 13.3

	% SMYS	MPa
First Pressure Cycle	0 - 90 - 0	0 - 15.82 - 0
Cycles 2 through 6	10 - 72 - 10	1.76 - 12.65 - 1.76

Dent Depth After Pressure Cycles (mm) = 17.8 (%OD) = 5.5

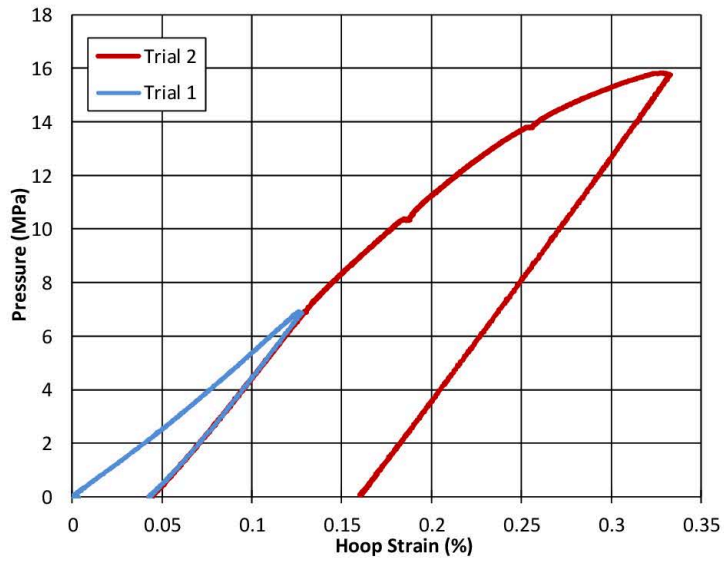

Prepared By:	Date:	Title:	C-FER Technologies
BCA	4-Apr-17	**Task 9.c Bend Test with Dent**	
Reviewed By:	Date:	Specimen Identification:	Page 9 of 9
CMJT	4-Apr-17	**9.c.iii (Dent 3)**	