FAIRBANKS NATURAL GAS, LLC 3408 International Way • Fairbanks, Alaska 99701 • (907) 452-7111 • FAX (907) 457-8111

09-30-16 11:13 RCVD

Chris Hoidal
Director, Western Region
Pipeline and Hazardous Materials Safety Administration
12300 W. Dakota Ave., Suite 110
Lakewood, CO 80228

Sept 23, 2016

Attn. Mr. Hoidal

The Notice of Amendment Letter, reference # CPF 5-2016-3003M, dated August, 2016, in response FNG would like to show changes to the Standard Operating procedures (SOP's).

PHMSA / Comment:

FNG procedure that covered the process for depressurizing a plant or venting LNG in the event of an emergency was not in accordance with NFPA 59A, Section 9.9.1., which was incorporated by reference into 49CFR 193. In particular, SOP 6101 General Description of LNG Storage Facilities p.2#3 (Rev 9 ED 4/15/16) notes that "...each tank has a blowdown valve that allows a manual release of pressure." However, SOP 6101 lacks the other requirements of NFPA 59A 2001 Section 9.9.1 with respect to storage isolation, atmospheric venting, and minimizing personnel exposure to discharge.

FNG's Response:

1. FNG has revised its SOP 6101 General Description of LNG Storage Facilities. The FNG tanks are protected from overpressure by a dual safety relief valve system designed to relieve at a given set point. Also, each tank has a blowdown valve that allows manual release of pressure, which vents in a direction of outwards and up into the atmosphere. The blow down valves are positioned to discharge outwards and up into the atmosphere, to minimize operator / personnel to exposure of LNG over pressure discharge / venting.

2. LNG storage isolation will occur when the ESD valves are activated. In emergency situations, reduction of gas pressure in the LNG Storage tanks or isolation of Storage tank LNG piping sections can be achieved by activating individual or all ESD's. See SOP 1111 - Emergency Shutdown, Restoration and Alarm Operations.

By providing isolation to "specific locations" within the LNG storage facility, in an emergency situation or over pressure situation causing a discharge. Isolation of these "specific locations" will provide a safer degree of public safety and/or a safer working environment for FNG personnel.

3. FNG appreciates the opportunity to take corrective action. If you have further questions or instructions on this matter, please call me at (907) 452-7111 or e-mail me at cgillespie@fngas.com.

Sincerely,

Chris Gillespie

General

1. The FNG LNG Storage and Vaporization Facilities are part of a base load system supplying gas to the natural gas distribution network in Fairbanks. Their purpose is to store and vaporize liquefied natural gas (LNG) for delivery into the gas distribution mains. The sites have a gravel base and is a surrounded by chain link security fence with vapor barrier. Security lighting is located in various locations around the site.

2. The principal components of the facilities are:

   A. LNG Storage

   B. LNG Transfer

   C. LNG Vaporization

   D. Odorizing, Metering and Pressure Regulation

   E. Electrical and PLC

   F. Fire and Gas Detection

   G. Emergency Shutdown Device (ESD)

LNG Storage Tanks

1. The LNG storage tanks are cryogenic vessels designed to store LNG at -320° F at up to 100 psig, but FNG stores LNG at about -228° F at 45-50 psig. (Tank 4 at SS#1 is an exception to this. Tank 4 is a 50 psig maximum tank that is maintained at around 45 psig.) Each tank is actually two tanks, one inside the other. The inner tank is constructed of aluminum or another low temperature alloy and is a pressure vessel designed to hold LNG at a maximum design pressure. The maximum design pressure varies for each tank. The outer tank is a carbon steel support tank. Figure 1 below is a diagram of a typical LNG storage tank similar to the ones used at the FNG LNG facility.

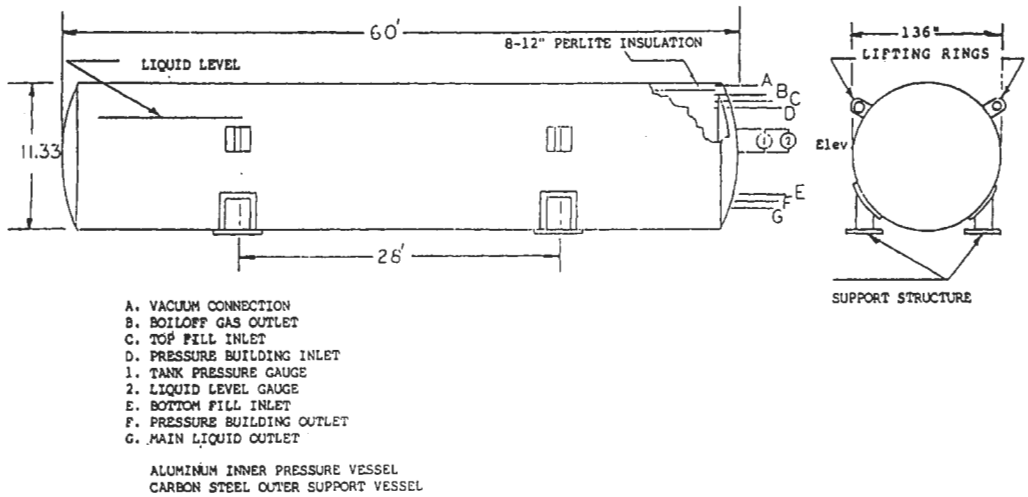

Figure 1. Typical Shop-Built LNG Storage Tank

2. Between the inner tank and the carbon steel outer tank is an annular space. The annular space is filled with Perlite granular insulation and is pulled to a vacuum. In order to compensate for the contraction of pipes due to the vast temperature change from outside each tank to the inside, critical pipes going inside the tank have one of two systems engineered to allow for the contraction. The piping either goes through a number of 90° bends or through a bellowed pipe allowing the pipes to safely contract or expand.

1. The FNG tanks are protected from overpressure by a dual safety relief valve system designed to relieve at a given set point. Also, each tank has a blowdown valve that allows manual release of pressure, which vents in a direction of outwards and up into the atmosphere. The blow down valves are positioned to discharge outwards and up into the atmosphere, to minimize operator / personnel to exposure of LNG over pressure discharge / venting.

2. LNG storage isolation will occur when the ESD valves are activated. In emergency situations, reduction of gas pressure in the LNG Storage tanks or isolation of Storage tank LNG piping sections can be achieved by activating individual or all ESD's. See SOP 1111 - Emergency Shutdown, Restoration and Alarm Operations.

By providing isolation to "specific locations" within the LNG storage facility, in an emergency situation or over pressure situation causing a discharge. Isolation of these "specific locations" will provide a safer degree of public safety and/or a safer working environment for FNG personnel.

4. Stratification of LNG can occur in LNG storage tanks. Stratification is the layering of LNG due to different temperature and associated densities. Stratification can sometimes result in rollover. Rollover is a condition where a low-lying warm layer of LNG rapidly rises to the top. The warmer LNG will quickly vaporize potentially causing overpressure and venting. There is a very low probability of this happening to the tanks at the FNG facility because:

   A. The ASME tanks at the FNG storage facilities have round bottoms and sides, which promote convection and constant natural stirring of the liquid. Because of the constant stirring, the LNG does not become stratified. Flat bottom tanks have a higher occurrence of stratification.

   B. Long storage times can cause stratification in LNG storage tanks. FNG utilizes the LNG in the tanks rapidly, sometimes within a day's time.

   C. The LNG stored at the FNG facilities exclusively received from one source (with rare exception) resulting in a normalization of LNG temperatures and densities.

   D. The FNG LNG tanks have bottom and top fill capabilities. Being able to fill from different locations will promote mixing and avoid stratification. If FNG suspects an LNG load to be a nonstandard temperature, the LNG can be offloaded as necessary to promote mixing.

5. The following tables detail specific parameters for the FNG Storage Tanks at both storage sites. As can be seen from the table, the tanks are rated at certain gallons gross capacity, respectively. However, they are only designed to hold specific and lower amount of LNG (net capacity). There is a difference in volumes because the liquid is stored under such conditions that a slight drop in pressure would cause it to boil. The extra 10% of space acts as a buffer zone for the boiling vapors and prevents a sharp rise in tank pressure.

ATTRIBUTE	UNITS	TANK 1	TANK 2	TANK 3	TANK 4
GROSS VOLUME (WATER CAPACIY)	U.S. GALLONS	27,077	20,000	27,200	27,089
FULL LEVEL (Approximate)	INCHES	40.0	38.0	41.5	34.5
MAXIMUM WORKING PRESSURE	PSIG	100	83	100	50
NET CAPACITY (90%)	U.S. GALS	24,384	17,973	24,469	24,450
NET CAPACITY	MSCF	2,024	1,492	2,031	2,020

Table 1. Storage Site #1 Tank Specifications

ATTRIBUTE	UNITS	TANK 1	TANK 2	TANK 3	TANK 4
GROSS VOLUME (WATER CAPACIY)	U.S. GALLONS	55,000	55,000	83,333	83,333
FULL LEVEL (Approximate)	INCHES	44"	38.28"	52"	52"
MAXIMUM WORKING PRESSURE	PSIG	56#	90#	80#	80#
NET CAPACITY (90%)	U.S. GALS	50,000	50,000	75,000	75,000
NET BUFFER CAPACITY	MSCF	5000	5000	8333	8333

Table 2. Storage Site #2 Tank Specifications

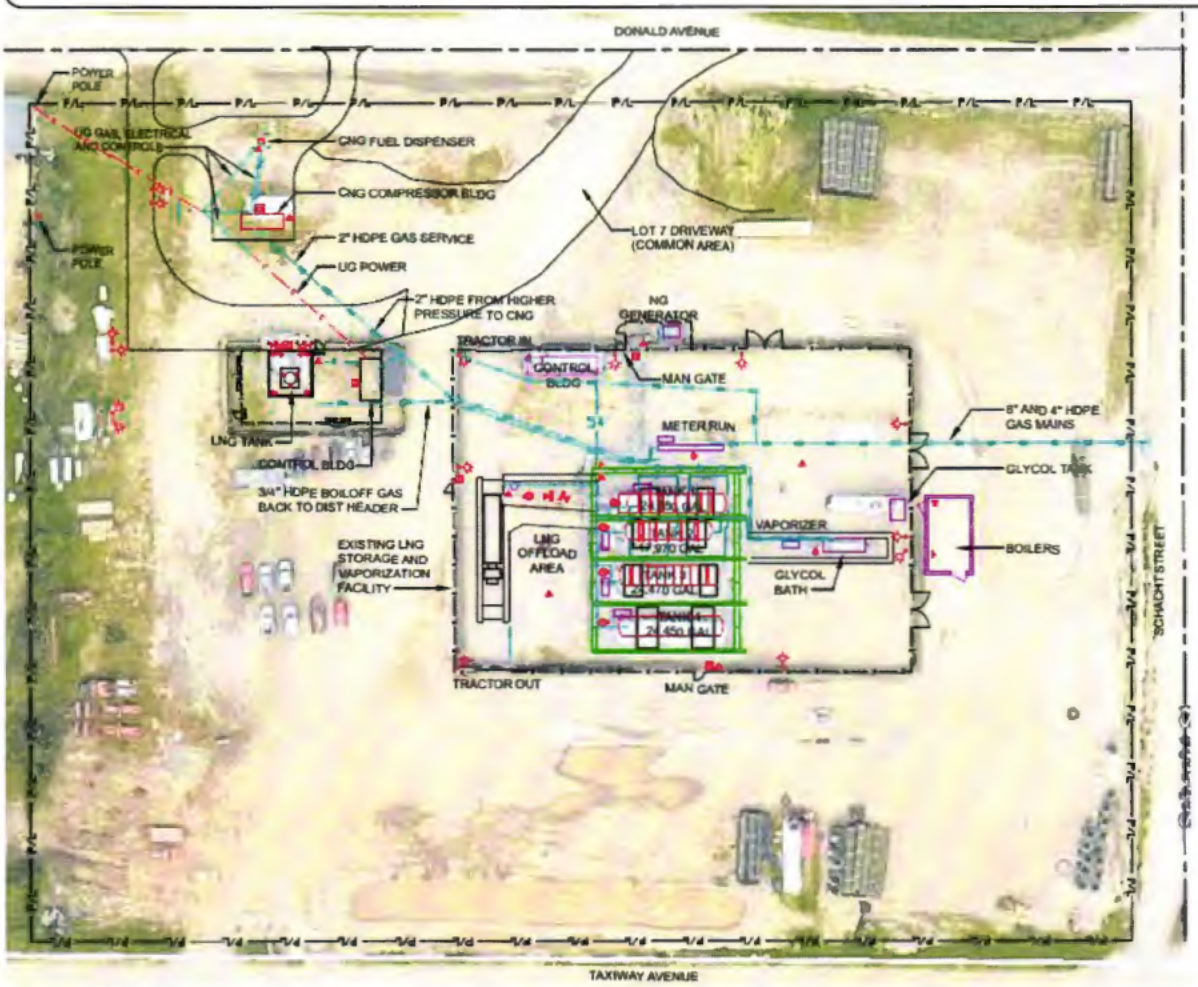

Figure 2. LNG Storage and Vaporization Facility #1 Plot Plan

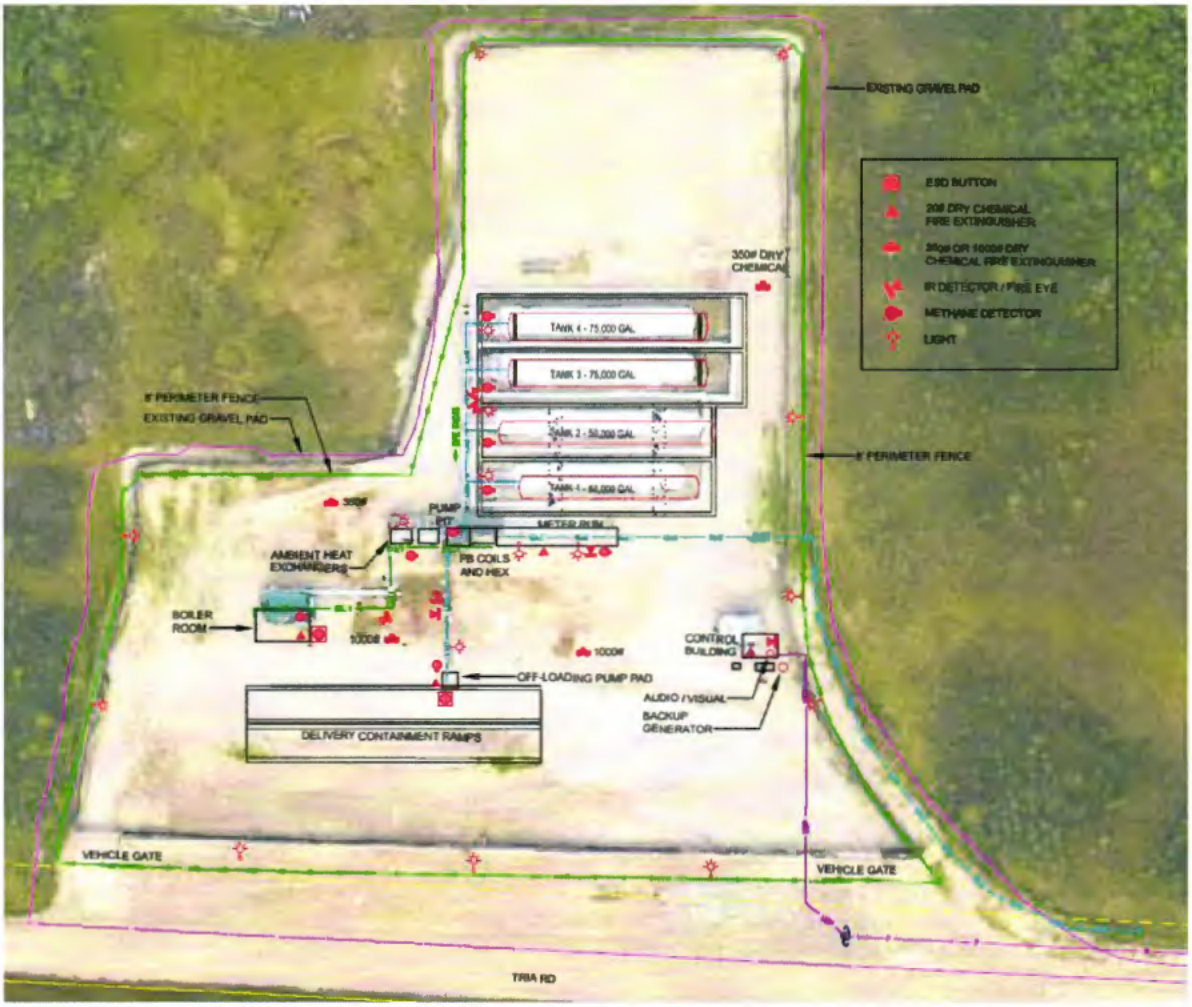

Figure 3. LNG Storage and Vaporization Facility #2 Plot Plan

LNG Vaporization System

1. The vaporization system used at the LNG Storage Facilities utilize a system of heat exchangers and gas fired boilers looped together by a glycol system.

2. Natural gas boilers housed a safe distance away from the heat exchangers, LNG and production gas piping and the LNG storage tanks warm glycol (heat transfer fluid) before it is pumped to the heat exchangers:

   A. SS#1 - Three (3) 2 MMBH gas fired boilers. Two are a forced draft wet base boiler and the other is a coil type atmospheric boiler.

B. SS#2 - Two (2) 1 MMBH gas fired coil type atmospheric boilers.

3. The primary heat exchangers are tube and shell heat exchanger. At the heat exchanger, the warmed glycol gives up its heat to the LNG as the LNG passes through a number of tubes within the heat exchanger. By heating the LNG, the liquid vaporizes back to gas form. The gas is then sent to be odorized. The cooled glycol is then sent back to the gas fired boilers to be heated once again.

   A. SS#1 has a capacity to vaporize approximately 125 MCFH or 3.0 MMCFD

   B. SS#2 has a capacity to vaporize 300 MCFH or 7.2 MMCFD.

4. In addition to the gas fired boilers and heat exchanger at SS#1, a self-contained combination heater and heat exchanger (VHE620) is on site as a backup and is only fired during emergency situations. The unit has a glycol bath containing a number of pipes in which LNG passes, similar to the other heat exchangers. The difference is that the VHE620 has its own heat source.

5. Boil-off vapors of LNG is heated by Ambient Vaporizers before it enters into the distribution system.

Transfer System

The LNG Transfer System consists of an impounded area in which the LNG Tanker is parked in preparation for the offload of the LNG from the Tanker to the Storage Tanks. The Tanker is connected to the fill manifold consisting of an LNG fill line and a vapor return line. The transfer station is equipped with a cryogenic pump, but both pressure and pump transfers are available at each site.

Pressure Building System

When the plant is in operation and there is a gas demand on the distribution system, LNG will flow out of the tanks into the vaporizers. As a result of this flow, the pressures inside the tanks may decrease. If the pressure in the tanks were allowed to fall below the distribution system's pressure, pumps at SS#2 are used to draw more LNG to supply gas to the Distribution System. Instead of a pump system, a pressure building system has been installed which automatically maintains the tank pressure to a set level. The Pressure Building System is a combination of ambient vaporizers connected the tanks. The pressures in the tanks are maintained by several controllers, which will open or close a liquid valve, which then feeds LNG into an ambient vaporizer. If the pressure in a tank is too low, the controller will open the valve and send LNG into the ambient vaporizer. The LNG is vaporized resulting in gas at a higher pressure being

returned to the tanks, which increases the pressure in the tanks. When the tank pressure reaches its set point the controller will close the valve, stopping the flow of LNG into the ambient vaporizer. At SS#1, Tanks 1-3 are tied together and maintain the same pressure, while Tank 4 is maintained separately.

Boiloff System

There is no active refrigeration of the LNG being stored, so LNG continuously warms and boils at a low rate. As it boils, the vapors given off accumulate and build pressure (due to the volumetric expansion from a liquid to a gaseous state). If this boiloff was allowed to continue without regulation, the pressure in the tank would increase until the tank safety relief valves opened. Consequently, a substantial amount of gas would be lost to the atmosphere. To prevent this, a boiloff system is installed to reduce the tank pressure, by allowing the gas vapors to exit the tank through a backpressure regulator, and into the vaporizers, metering and odorant systems and then into the distribution system.

At SS#1, each tank has its own backpressure regulator that can be set to control the pressure in that tank, or they can be bypassed and the main backpressure regulator can be set to maintain equal pressure in all the tanks. The individual tank regulators are bypassed and tank pressures are regulated with one backpressure regulator.

Odorizing, Metering and Pressure Regulation

1. Vaporized gas and gas from tank boiloff, leaves the vaporizers and enters the distribution header. The gas passes through a filter prior to passing through an 8" turbine master meter that meters gas used by the distribution system and plant operations. Gas vented by relief valves during offloads or operations before the master meter is not metered. The gas then flows through a regulator, where the pressure is regulated to the desired distribution pressure. Normal operating pressures are between 20 and 60 psi and set at 35-45 psig depending on distribution needs, and pressure is not to exceed 60 psi. At the metering station a small gas stream is taken upstream of the regulator and sent through a YZ odorizer, where it is odorized and returned to the gas stream on the downstream side of the pressure regulator.

2. In addition to the master meter, other meters are maintained to measure site and company building and equipment gas usage. There are meters for the service buildings and boilers.

3. In the event that distribution pressure cannot be maintained, there are two product pumps located at the beginning of the meter run on the LNG production line at SS#2.

Electrical, Programmable Logic Controller (PLC), Communications and Alarms

1. The LNG Storage Site is supplied power through a 480 Volt, 3 Phase service from the GVEA grid. This service supplies the power for all equipment on the site. There are several breaker panels and transformers handling the electrical load.

2. There is a backup power supply installed, consisting of a UPS (Uninterruptable Power Source) and a generator, which supplies backup power to critical functions and emergency lighting in the event of GVEA power failure.

3. The service building houses the computers, PLC, alarms and telephone. These systems have the following capabilities:

   A. Plant monitoring with on-site and dial-in remote monitoring capability.

   B. Compilation of history and trending reports.

   C. Notification alarm system, which is activated in the following instances:

      1) PLC is not operating

      2) Detection of flame UV detectors

      3) Detection of methane by methane detectors

      4) GVEA power has been disconnected

      5) Pressure alarm (distribution and tanks)

      6) Low gas temperature out of the vaporizers

      7) Critical alarm shutdown (SS#2 only)

      8) Non-critical alarm (SS#2 only)

   D. In the case of an alarm, the following will occur:

      1) An audible and visual alarm is sounded.

      2) In certain cases, ESD valves are actuated stopping the flow of LNG from the tanks.

3) Recorded telephone and pager messages are sent out to the appropriate personnel.

Fire and Gas Detection

Flame and methane detectors monitor the LNG Storage Facility. These detectors are located in areas within the storage site that could potentially have a concentration of natural gas, LNG spill or fire. In the event of methane or flame detection, the alarm system is activated. See SOP 1112 for description and location of methane and flame detectors. In addition to the fixed gas detectors, there are 2 portable gas detectors located in the service building.

Fire Protection Equipment

1. The FNG storage facility is equipped with adequate fire fighting equipment. The best known medium used to fight LNG fires is by use of dry chemical. The LNG storage site has a number of portable handheld and wheeled dry chemical extinguishers located throughout the site. There is also one CO2 handheld extinguisher for use around sensitive electrical areas.

2. The local fire department has the capability run hose from nearby hydrants to reach each facility in case water might be needed.

Emergency Shutdown Devise (ESD)

1. The ESDs will effectively stop power to certain motor actuated and solenoid valves. The motor and solenoid valves, in turn, control LNG production valves, bottom fill valves and valves to the pressure building coils on all tanks. When the power is cut, the valves will close, stopping the flow of LNG and minimizing the potential of a catastrophic LNG release.

2. At both facilities, operators can ESD these valves via the Plant computer by remote connection.

3. At both facilities, here is an ESD which will shutdown the transfer pump only in the event of an emergency.

4. SS#1 is equipped with Emergency Shutdown Devices (ESD) push buttons located at each man gate.

Training

1. Upon hire, all designated operating and maintenance and supervisory personnel must receive initial training on all of the above including:

   A. Controls

   B. Functions

   C. LNG Transfers

   D. Others, as needed

2. At intervals not to exceed 2 years, all personnel must receive refresher training in the subjects in which they received initial training.

3. Records will be kept on all training.

Emergency Shutdown (ESD)

1. The ESD is a system of valves and activating buttons that will immediately and automatically stop the flow of LNG from the tanks effectively shutting down site processes.

2. Instructional signs on how to operate the ESD system are posted where ESD buttons are located.

3. These valves are normally operational valves used to control the flow of LNG and vapor, but also linked together to become ESDs when activated.

4. The valves actuated by ESD at SS#1 are:

   A. Tank 1

      1) V104 - LNG production

      2) V106 – Pressure building coils

   B. Tank 2

      1) V200 – LNG production

      2) V206 – Pressure building coils

   C. Tank 3

      1) V300 – LNG production

      2) V306 – Pressure building coils

   D. Tank 4

      1) (Both normally closed)

5. The valves actuated by ESD at SS#2 are:

   A. Tank 1

      1) AOV 501 - LNG Out

      2) AOV 301 - Vapor Return from LNG Pumps

      3) AOV 201 - Vapor Return from Pressure Building / Ambient Heat Exchangers

      4) AOV 101 - LNG Fill

   B. Tank 2

      1) AOV 502 - LNG Out

2) AOV 302 - Vapor Return from LNG Pumps

3) AOV 202 - Vapor Return from Pressure Building / Ambient Heat Exchangers

4) AOV 102 - LNG Fill

C. Tank 3

1) AOV 503 - LNG Out

2) AOV 303 - Vapor Return from LNG Pumps

3) AOV 203 - Vapor Return from Pressure Building / Ambient Heat Exchangers

4) AOV 103 - LNG Top Fill

5) AOV 403 - LNG Bottom Fill (Not in service)

D. Tank 4

1) AOV 504 - LNG Out

2) AOV 304 - Vapor Return from LNG Pumps

3) AOV 204 - Vapor Return from Pressure Building / Ambient Heat Exchangers

4) AOV 104 - LNG Top Fill

5) AOV 404 - LNG Bottom Fill (Not in service)

6. ESDs are activated by:

A. An operator may manually activate the ESD system by:

1) Clicking ESD button on the ESD screen of the Plant computer with mouse pointer (Site #1 only).

2) Depressing the ESD buttons located at each man gate (SS#1 only).

3) Depressing whole site ESD button at transfer area.

4) Depressing ESD button at control panel inside control building.

B. Gas detector indicating 50% LEL.

C. Fire eye detection and fire eye safety relay fault.

7. If the ESD is manually activated by the ESD buttons:

   A. The Shunt trip breaker located in the backup breaker panel near the PLC opens (SS #1).

   B. When the breaker opens, power is cut to the motor actuated and electric control solenoid valves controlling the actuated valves.

8. If the ESD has been activated via the PLC computer or the 50% LEL detector, power is cut to the motor actuated and electric control solenoid valves controlling the LNG tank out valves. The Shunt breaker is not activated.

Alarms

1. The LNG Storage Sites have a number of alarms that activate to alert operators of certain events being monitored at the storage sites. Two actions occur when alarms are activated:

   A. Local visual and audible alarms activate outside the service building and at the Plant computer.

      1) At SS#1, one alarm light and siren are activated for warning events as well as ESD events.

      2) At SS#2, a red light is activated during events causing ESD of actuated valves and an amber light is activated during all other warning events.

   B. Unique alarm notifications are sent out to individual phone numbers and pagers. These are:

      1) PLC is not operating

      2) UV flame detectors have been activated

      3) Gas detectors have reached 30% (SS#1) or 25% LEL (SS#2)

      4) Gas detectors have reached 50% LEL (in addition to ESD)

      5) GVEA power outage

6) Pressure alarm (Low distribution pressure)

7) Low gas temperature out of the vaporizers

8) Critical alarm shutdown (SS#2 only)

9) Non-critical alarm (SS#2 only)

2. The distribution also has unique alarm notifications sent out to individual phone numbers and pagers (located at the FNG Office). These alarms are:

   A. Low distribution pressure

   B. High distribution pressure

3. The gas detector alarms have a 60-minute manual override for use during LNG tanker offloads.

   A. To activate, press the red momentary button located in the PLC room of the service building. This will cause the green normal light to turn off.

   B. After 60 minutes, the green normal light will relight and the gas detectors will be in operational mode once again.

Restoring LNG Facility to Normal Conditions

1. Make sure the storage site is safe by clearing hazardous environments or situations.

2. To clear alarms and/or ESD conditions and return plant to normal status at SS#1:

   A. Click the Acknowledge button of the Alarm screen of the PLC computer.

   B. Return the Shunt trip breaker to the ON position if ESD was activated by red gate button.

   D. Click the ESD button ON.

   E. Click all tank ESD buttons to their desired positions on screen and in field.

   F. Stop the alarm light and horn by clicking the Horn button on the ESD screen of the Plant computer.

3. To clear alarms and return plant to normal status at SS#2:

A. Click the Acknowledge button on the computer or HMI screen.

B. If necessary, depress Silent button on Control Panel.

C. If necessary, depress reset button on Control Panel.

D. If ESD buttons were depressed, ensure those buttons are returned to normal position.

2. If necessary, follow procedures detailed in SOP 6220 Vaporization and Boiler Operations to restart vaporization.

3. If necessary, follow procedures detailed in SOP 6210 LNG Storage Tank Operations to restart LNG flow to vaporizers.

4. Monitor that pressures and temperatures at desired limits.