KINDER MORGAN
COCHIN LLC

JAN - 5 2016

January 4, 2016

Mr. Allan C. Beshore
Director, Central Region
DOT/PHMSA/Office of Pipeline Safety
901 Locust Street, Suite 462
Kansas City, Missouri 64106-2641

Re: Notice of Probable Violation, Proposed Civil Penalty and Proposed Compliance Order
CPF No. 3-2015-5008
Kinder Morgan Cochin LLC
Request for Hearing

Dear Mr. Beshore:

This is a request for a hearing in response to the above referenced Notice of Probable Violation received by Kinder Morgan Cochin LLC on November 5, 2015, which includes proposed civil penalties and a proposed compliance order (the "NOPV"). By letters dated December 1, 2015 and December 10, 2015, the Pipeline and Hazardous Materials Safety Administration ("PHMSA") granted an extension of time to respond to the NOPV, directing a response by January 4, 2016.

Kinder Morgan Cochin LLC ("Kinder Morgan"), pursuant to 49 C.F.R. §§ 190.208 and 190.211, hereby requests a hearing on the NOPV with respect to alleged violation Item 1, and the associated proposed civil penalty and proposed compliance order.

Kinder Morgan will not contest the Item 2 and Item 3 violations, but will seek PHMSA's reconsideration of the proposed civil penalties associated with those violations, which occurred at the Alameda Pump Station in Canada. At the time of PHMSA's evaluation the pipeline transported propane, with flow was from north to south. However, since that time, the pipeline has been completely re-purposed through the successful completion of the $260 million Cochin Reversal Project, which included the following: (1) the construction of a new Cochin terminal with 1 million barrels of breakout tankage in Kankakee County, Illinois; (2) reversal of flow to provide for south to north transportation of light condensate from Illinois to Fort Saskatchewan; (3) reversal and modification of 25 pump stations; and (4) installation of DRA injectors at each pump station. One consequence of the project is that the Alameda Pump Station no longer controls pressure in the US portion of the Cochin System. In light of such significant developments since the inspections, Kinder Morgan respectfully requests that PHMSA take all these factors into account and reconsider the assessment of civil penalties for Items 2 and 3.

Enclosed with this request for hearing is Kinder Morgan's Statement of Issues, which includes an Exhibit A (and attachments), containing information and records related to the issues listed for alleged violation Item 1.

Kinder Morgan will be represented by counsel at the hearing and Kinder Morgan requests that a transcript of the hearing be prepared by a certified court reporter, which services will be arranged by Kinder Morgan. Kinder Morgan also requests that PHMSA provide Kinder Morgan with all materials in the case file that are not contained in the Violation Report and accompanying exhibits.

1001 Louisiana Street, Suite 1000 Houston, Texas 77002 713/369-9000 713/369-9394 Fax

Kinder Morgan is willing to meet informally with PHMSA at any time prior to the hearing to provide additional information to PHMSA that might facilitate a resolution of any of the matters raised in the NOPV.

If you have any questions about this Request for Hearing or about this matter generally, please do not hesitate to contact either me (at 713-420-6330) or Edward (Buzz) Fant (at 713-369-9443).

Sincerely,

Wayne Simmons
Vice President Operations and Engineering

Enclosures

cc: Ronald G. McClain
Randy Parker
Edward (Buzz) Fant
Dan Lyons
Vince Murchison

PIPELINE AND HAZARDOUS MATERIALS SAFETY ADMINISTRATION
WASHINGTON, DC 20590

In the matter of:	§	
	§	
Kinder Morgan Cochin LLC	§	CPF No. 3-2015-5008
	§	
Respondent	§	
	§	

STATEMENT OF ISSUES
OF
KINDER MORGAN COCHIN LLC
TO
NOTICE OF PROBABLE VIOLATION
PROPOSED CIVIL PENALTY
AND
PROPOSED COMPLIANCE ORDER

Kinder Morgan Cochin LLC ("Kinder Morgan") submits this Statement of Issues pursuant to 49 C.F.R. § 190.211(b) in connection with its request for a hearing pursuant to 49 C.F.R. § 190.208.

By letter dated October 30, 2015, the Pipeline and Hazardous Materials Safety Administration Office of Pipeline Safety ("OPS") issued to Kinder Morgan a Notice of Probable Violation, Proposed Civil Penalty and Proposed Compliance Order (collectively, the "NOPV"), CPF No. 3-2015-5008. By letters dated December 1, 2015 and December 10, 2015, the Director, Central Region, OPS, granted an extension of time to respond to the NOPV and directed that Kinder Morgan respond by January 4, 2016. In a separate letter, Kinder Morgan has requested a hearing in this case, and this Statement of Issues is provided pursuant to 49 C.F.R. § 190.211(b).

BACKGROUND

This case results from an OPS inspection of the Cochin Pipeline in the areas of Charles City, Iowa, and Jamestown, North Dakota on June 11-15, 2012, and July 23-27, 2012.

In the NOPV, OPS alleges three violations of the pipeline safety regulations, proposes civil penalties for each, and proposes a compliance order for alleged violation Item 1. Kinder Morgan contests the alleged violation asserted in Item 1 of the NOPV but not the alleged violations asserted in Items 2 and 3; however, Kinder Morgan contests all Proposed Civil Penalties for Items 1, 2, and 3, as well as the Proposed Compliance Order relating to Item 1.

THE ALLEGED VIOLATIONS

Kinder Morgan sets out below its factual, legal and regulatory issues that relate to alleged violation Item 1 of the NOPV after stating the allegations of the NOPV.

Item 1. 49 C.F.R. § 195.428 Overpressure safety devices and overfill protection systems

> **(a) Except as provided in paragraph (b) of this section, each operator shall, at intervals not exceeding 15 months, but at least once each calendar year, or in the case of pipelines used to carry highly volatile liquids, at intervals not to exceed 7 ½ months, but at least twice each calendar year, inspect and test each pressure limiting device, relief valve, pressure regulator, or other item of pressure control equipment to determine that it is functioning properly, is in good mechanical condition, and is adequate from the standpoint of capacity and reliability of operation for the service in which it is used.**
>
> [Kinder Morgan] failed to inspect and test each highly volatile liquids pump station pressure limiting device to determine that it was functioning properly, in good mechanical condition, and adequate from the standpoint of capacity and reliability. [Kinder Morgan] uses an electrical communication loop for operation of the overpressure protection system at its pump stations. This communication loop is from the pressure sensing line, to the transmitter, to the programmable logic controller, to the variable frequency drive or variable speed drive, and to the pump. In this scenario the "pressure limiting device" is the entire communication loop, since all of these devices must be functioning properly for pressure control. Therefore, the entire loop must be inspected to meet the requirement of §195.428. [Kinder Morgan] only inspected the transmitters and failed to inspect any other portion of the communication loop for four (4) inspection cycles from October 2010 to April 2012 at the Masonville Pump Station in Iowa. *See* NOPV at 1.

Kinder Morgan presents the following issues with regard to Item 1 of the NOPV:

1.1. Kinder Morgan objects to the stated factual and technical bases of the alleged violation and asserts that it has always complied with 49 C.F.R. § 195.428(a). In the belief that this violation results from a factual misunderstanding, in the attached Exhibit A Kinder Morgan offers a detailed description of the protocol used for testing pressure regulating communications loops, along with supporting documentation. Kinder Morgan does not submit Exhibit A as a written response, but only as an explanation, and Kinder Morgan reserves the right to respond to this alleged violation in writing or at a hearing.

1.2. The alleged violation is not supported by the evidence in the case file.

1.3. The NOPV does not explain, discuss, or analyze any facts in reaching the conclusion that Kinder Morgan is in violation of the subject regulation.

1.4. OPS has not met its burden of proof that a violation occurred.

1.5. A portion of the acts of which OPS complains occurred more than five years prior to service of the NOPV, and, therefore, such alleged violations are barred by the statute of limitations, 28 U.S.C. § 2462.

THE PROPOSED CIVIL PENALTIES

OPS proposes a total of $51,400 in civil penalties in connection with alleged violations Items 1, 2 and 3, to which Kinder Morgan presents the following issues:

1. With respect to the Proposed Civil Penalty for Item 1, the alleged violation is not supported by substantial evidence, or by a rational connection between the facts and the conclusion that a violation occurred. Rather, Kinder Morgan will demonstrate that it has been in compliance with 49 C.F.R. § 195.428(a). Due to that issue, the Proposed Civil Penalty may not be imposed and should be withdrawn.

2. With respect to all Proposed Civil Penalties, the NOPV and the Violation Report do not present sufficient evidentiary grounds for determining the penalty amounts, and neither is there any discussion, explanation or analysis of the manner in which the penalty amounts were determined. Due to those issues, Kinder Morgan has no reasonable opportunity to prepare an adequate defense to contest the Proposed Civil Penalties.

3. With respect to all Proposed Civil Penalties, the NOPV and Violation Report do not present sufficient evidentiary basis for the penalty assessment considerations of 49 CFR §190.225, and neither do they present any discussion, explanation or analysis of the penalty assessment considerations. Due to those issues, Kinder Morgan has no reasonable opportunity to prepare an adequate defense to contest the Proposed Civil Penalties.

4. With respect to all Proposed Civil Penalties and the penalty assessment considerations of 49 CFR §190.225, the NOPV presents no discussion of the weight accorded each consideration, and no relative weighting among all of the considerations. Due to those issues, Kinder Morgan has no reasonable opportunity to prepare an adequate defense to contest the Proposed Civil Penalties.

5. With respect to all Proposed Civil Penalties, Kinder Morgan objects to the magnitude of the proposed penalties as: unreasonable; disproportional to any of the penalty assessment considerations of 49 C.F.R. Part 190.225; unsupported by any evidence that supports, or any analysis that applies, the penalty assessment considerations; arbitrary, capricious or otherwise not in accordance with law; and an abuse of discretion.

THE PROPOSED COMPLIANCE ORDER

Item 1 of the Proposed Compliance Order proposes that Kinder Morgan "shall amend it[s] practices and procedures to include the entire electrical communication loop which controls its overpressure protection devices. [Kinder Morgan] shall submit the amended procedure manual within 90 days of the Final Order. [Kinder Morgan] shall then conduct an inspection of its overpressure protection devices in accordance with its amended procedure within 180 days of the Final Order."

Kinder Morgan presents the following issues to the Proposed Compliance Order:

1. A Proposed Compliance Order cannot be imposed absent proof of a violation, and since Kinder Morgan can demonstrate compliance with 49 C.F.R. 195.428(a), the compliance order cannot be issued. See 49 C.F.R. 190.217.

2. 49 C.F.R. 190.217 requires that OPS show that the nature of the alleged violations and the public interest warrant issuance of the Proposed Compliance Order, but OPS has not done so. Due to that issue, OPS cannot impose a compliance order. *See* 49 C.F.R. 190.217.

3. Item 1 of the Proposed Compliance Order would order amendment of Kinder Morgan's "practices and procedures," yet alleged violation Item 1 does not involve Kinder Morgan's practices or procedures; therefore, OPS has not complied with 49 C.F.R. § 190.217 and cannot issue a compliance order addressing Kinder Morgan's practices and procedures. Moreover, Kinder Morgan's procedures accomplish exactly what Item 1 would order.

4. Item 1 of the Proposed Compliance Order would require Kinder Morgan to complete the procedural amendments within 90 days of a Final Order, then physical inspection of Kinder Morgan's "overpressure protection devices" within 180 days of a Final Order; however, OPS has presented no factual basis for determining those time periods, and no analysis or discussion for how it determined those time periods. Further, the 90 and 180 day time periods do not consider resource requirements and other factors that could affect the determination of a reasonable time period for implementing the proposed compliance actions. Due to those issues, requiring compliance in those time periods would be arbitrary and capricious and an abuse of discretion.

5. Item 1 of the Proposed Compliance Order is vague and ambiguous in that it directs a procedural amendment with respect to "the entire electrical communication loop," then directs inspection of "overpressure protection devices," which are inconsistent concepts, and thus fails to rationally connect the two concepts. Due to those issues, the Proposed Compliance Order lacks the specificity necessary to order specific performance.

CONCLUSION

At the hearing, Kinder Morgan intends to demonstrate compliance with 49 C.F.R. § 195.428(a) and present evidence and arguments in support of the issues stated above. Kinder Morgan reserves the right to supplement this Statement of Issues at or before the hearing.

January 4, 2016

Wayne G. Simmons
Vice President Operations and Engineering
Kinder Morgan, Inc.
1001 Louisiana Street, Suite 1000
Houston, Texas 77002

(713) 420-6330
Wayne_Simmons@KinderMorgan.com

Exhibit A
Kinder Morgan Protocol for Testing Communication Loop

Introduction

Kinder Morgan provides the following system description in connection with alleged violation Item 1:

Kinder Morgan's compliance staff had previously provided follow-up information regarding this Item to the attending PHMSA inspector but due to several schedule conflicts were never able meet to discuss the material. On November 16, 2015, this same information was emailed to Gregory Ochs and discussed with him on November 19, 2105. Mr. Ochs recommended that we file the information with PHMSA for consideration for withdrawing the associated probable violation.

Documentation

The following Kinder Morgan documents **(Attachments 1 - 6)** will be referred to later in support of demonstrating that the communication loop associated with our overpressure protection system is being tested simultaneously as we inspect our overpressure protection device/system.

1. Kinder Morgan L-O&M 703, Pressure Limiting and Relief Devices and Inspections
    a. This is Kinder Morgan's Products Pipeline's Liquids Operations and Maintenance Manual procedure outlining our inspection requirements for pressure limiting and relief devices.
        i. Section 3.1.1, last paragraph discusses our requirements for the verification of safety alarms between field personnel and a qualified controller whenever any calibration or change to field instrument occurs.
            1. This is part of the communication loop test. As field simulated testing occurs applicable alarms are annunciated to the controller and are registered accordingly as SCADA events. This information could not be validated unless the communication loop from the field device to the control center was intact and working properly.
        ii. Section 3.5.3.c, discusses the requirement of field personnel contacting the qualified controller *or* SCADA support personnel to verify the alarm was displayed on the control console.
            1. This serves as part of the communication loop test. If the controller is not receiving any of the field testing information then the technician would need to troubleshoot and repair the communication loop between the field device and the controller.

2. Inspection record, L_OM700-04, Inspections of Pressure Relief Valves and Pressure Switch Equipment.
    a. Two inspection records for calendar year 2012. This information was requested by Gregory Ochs during our November 19, 2015 conference call.
        i. April 2012, and
        ii. October 2012
        iii. These records demonstrate that pressure switch "PS02", was calibrated and the associated communication loop was tested twice in calendar year 2012 and at intervals less than 7 ½ months as required by §195.428(a).
            1. Pressure Switch PS02 is found on the last row of this form which demonstrates that Pressure Switch PS02 was inspected on April 4, 2012 and on October 8, 2012.
            2. The communication loop verification is noted on the last column of the associated test for PS02. The column heading is noted as "Control Room Contact". It shows the initials of the associated controller that confirmed to the field technician the receipt of the applicable alarms via the communication loop.

a. This is the part that is required by O&M procedure, L-O&M 703, sections 3.1.1, last paragraph, and Section 3.5.3.c.

3. PHMSA letter, addressed to Ron McClain dated, March 30, 2012.
   a. This letter communicated PHMSA's approval to allow Kinder Morgan to raise its operating pressure to 1,000 psig.
      i. This record is to validate the information contained with the form column titled "Comments" on our 4/4/2012 inspection record L_OM700-04, Inspections of Pressure Relief Valves and Pressure Switch Equipment, which indicates "Recalibrated for MOP increase – MOC 1136". During this inspection cycle the pressure switch setting was increased from "660 psig" to "969 psig". Kinder Morgan Cochin was previously being operated at a reduced pressure of 600 psig, until such time that we obtained PHMSA's approval to operate at 1000 psig.

4. Two sets of SCADA event logs demonstrating the associated alarms triggered during the testing of Pressure Switch PS02.
   a. Record one, identified with heading "4/4/2012 Testing"
   b. Record two, identified with heading "10/8/2012 Test Data"
      i. This record also includes at the bottom of the page the description of the "Alarm, Control, and Event" column headings. These descriptions were requested by Gregory Ochs during our November 19, 2015, conference call.
   c. Both records show the following alarm events which are the result of a successful communication loop test associated with the inspection of the applicable pressure switch. "MSVL23" represents the abbreviation for our Masonville pump station.
      i. MSVL23_PAHH02 STN DIS PRESS SWITCH HI HI
         1. This alarm represents that the pressure at the pressure switch has reached the alarm set point
      ii. MSVL23_PS02 *STN DIS PRESS HI HI
         1. This alarm represents that pressure switch PS02, has been activated at its set point.
      iii. MSVL23_STNBPS STATION BYPASS ESD
         1. This alarm is a result of the pressure switch sensing the HI HI set point.
      iv. MSVL23_STNLO STN LOCKED OUT - LOCAL RESET REQUIRED
         1. This alarm is a result of the pressure switch being activated and indicating that a local reset is required.

5. A facility diagram titled "Control System Pump Station Cochin Typical".
   a. The typical drawing will be utilized to outline our inspection process documented below.

6. Kinder Morgan Cochin Pipeline, Maintenance / LOTO Procedure Pressure Switches
   i. This procedure supplements L-O&M 703.

Description of the Testing Process

The following is a step-by-step description the testing process and demonstration via documentation that the overpressure protection communication loop is being tested as part of our pressure switch inspection process

1. Refer to Attachment 5 – "Control System Pump Station Cochin Typical"
   a. Summary of process for testing pressure switch and associated communication loop.
      i. A field technician implements L-O&M 703, and Kinder Morgan Cochin Pipeline, Maintenance / LOTO Procedure Pressure Switches.
      ii. A field technician contacts the control center controller and informs them of the upcoming overpressure protection testing.
      iii. The technician prepares the pump station for upcoming testing.
      iv. The technician applies a simulated increasing pressure at point "PS02" (see "Control System Pump Station Cochin Typical").

1. If the communication loop is working correctly, the simulated pressure increase makes its way through the communication circuit. That is from PS02, to the Motor control relay, to the field control relay (PLC), to the SCADA system (and data logger) and SCADA control room event display.
2. Once the pressure switch PS02 set (pump shut down) pressure is reached the following actions are initiated via the communication loop.
    a. The pump is shut down
    b. The associated pressure switch activation and pump shut down alarms are recorded in SCADA
    c. *See* SCADA event logs at Attachments 4.a and 4.b for the validation of the following events
        i. MSVL23_PAHH02 STN DIS PRESS SWITCH HI HI;
        ii. MSVL23_PS02 *STN DIS PRESS HI HI;
        iii. MSVL23_STNBPS STATION BYPASS ESD; and
        iv. MSVL23_STNLO STN LOCKED OUT - LOCAL RESET REQUIRED.
3. If the communication loop is not working correctly, that is revealed by the test, and appropriate actions are taken to ensure correct operation and demonstration of correct operation by way of the testing protocol.

Summary and Conclusion

As the foregoing demonstrates, each time a pressure switch is tested, each portion of the associated communications loop that affects pressure regulation is likewise tested, which ensures that all devices are functioning properly, are in good mechanical condition, and are adequate from the standpoint of capacity and reliability of operation.

Kinder Morgan would be pleased to provide additional information and to further discuss its protocol for testing pressure regulating devices and associated communications loops.

Attachment 1
L-O&M 703

Table of Contents

1. Applicability 1
2. Scope 1
3. Core Information and Requirements 1
   3.1. Operations 1
   3.2. MOP and Set Points 2
   3.3. Pressure Limiting and Relief Device Set Points 2
   3.4. Annual Calibration Pressure Limiting Devices 3
   3.5. Inspection and/or maintenance includes the following activities. 3
   3.6. Overpressure Protection Evaluation and Review 4
4. Training 4
5. Documentation 4
6. References 4

1. Applicability

☒ CO2

☒ Crude

☒ Highly Volatile Liquids (HVLs) / High Vapor Pressure (HVPs)

☒ Refined Products /Natural Gasoline

2. Scope

This procedure describes operating and maintenance requirements for pressure limiting devices, relief devices, and overpressure shut-in devices. Over-pressure control devices regulate and/or relieve pressure at a point below the protection level settings of the pipeline system (including facility piping).

3. Core Information and Requirements

3.1. Operations

3.1.1. Operations will monitor the Maximum Control Pressure (MCP) at all facilities to insure that pressures do not exceed Maximum Operating Pressure (MOP) at any point along the pipeline during normal pipeline activity and that overpressure protection equipment is installed and set to prevent pressures from exceeding 110% MOP during variations from normal operations.

The alarms generated by these systems transmitted to a control room, displayed by a SCADA system and used by a pipeline controller are pipeline safety alarms. A list of pipeline safety alarms will be maintained for each location. The safety alarms covered by this procedure are:

a. Pressure over MCP

b. Pressure over MOP

c. Pressure Protection System Activated

Any calibration or changes to field instruments for the abovementioned safety alarms must be verified by contacting that the responsible control room and confirming with a qualified controller or SCADA support personnel that the alarm was displayed on the control console and the designation of the alarm was consistent with control system documentation.

3.1.2. KMP will install (or verify in the case of third party equipment) pressure limiting and/or relief devices on facilities connected to a pressure source where the MOP could be exceeded during normal or emergency conditions. The device limits the pressure by one or a combination of:

a. Shutting down a pump

b. Throttling a valve between the pressure source and protected facilities

c. Controlling driver RPM

d. Activating relief device

Determination of the device to be used and the installation details will be coordinated through Engineering.

Use **L-O&M Procedure 155, Management of Change** when changing the set point of, replacing, or modifying any pressure-limiting device.

3.2. **MOP and Set Points**

Each facility shall include adequate overpressure protection in its original design, including:

a. MOP and MCP documentation

b. Overpressure protection equipment and associated documentation

c. Set points for each device

Engineering must approve changes in original design. (Refer to **L-O&M Procedure 155, Management of Change**)

3.3. **Pressure Limiting and Relief Device Set Points**

Pressure limiting and overpressure protection set points are based on the MOP (Reference **L-O&M Procedure 201, MOP Determination**).

3.3.1. The set points on control valves, which are utilized for downstream pressure control, will be set to prevent the downstream pipeline's MOP from being exceeded during normal operations.

3.3.2. Set shutdown safety devices to prevent pipeline pressures from exceeding 110% MOP during variations from normal operations.

3.3.3. Relief Settings:

3.3.3.1. Engineering must determine relief settings to ensure that pressures under all conditions shall not exceed 110% of MOP.

3.3.3.2. The relief system shall be designed with adequate capacity to ensure that the pressure does not exceed 110% of MOP at maximum flow rates.

3.3.4. Thermal relief valves shall be set such that 110% of maximum operating pressure is never exceeded during static conditions.

3.4. **Annual Calibration Pressure Limiting Devices**

3.4.1. Inspect and test each pressure limiting device, relief valve, pressure regulator, or other item of pressure control equipment at mainline pumping stations and terminals to determine that it is functioning properly, is in good mechanical condition, and is adequate from the standpoint of capacity and reliability of operation for the service in which it is used:

a. **HVLs** — Inspect twice each calendar year in intervals not to exceed seven and one-half (7½) months.

b. **Non-HVLs** — Inspect once each calendar year in intervals not to exceed 15 months.

c. **Tanks (HVLs)** - Relief valves on pressure breakout tanks shall be tested at intervals not exceeding five (5) years.

3.4.2. Pressure Limiting and Relief Devices may include, but are not limited to:

a. Unit/station Outbound Line Pressure trip or trips

b. Unit/station Pump Discharge (case) Pressure trip

c. Station Control Valve System — pump discharge (case), outbound line pressure sensor/controller/valve & actuator/pilot

d. Delivery Terminal Control Valve System — manifold pressure sensor/controller/ valve and actuator/pilot

e. Relief Valve Control/Protection System

f. Variable Frequency Drive and controlling Programmable Logic Controller

3.5. **Inspection and/or maintenance includes the following activities.**

3.5.1. Mechanical Condition

a. Inspect mechanically operated devices as per manufacturer's recommendations, for potential problems and wear.

b. Ensure housings are clean and dry.

3.5.2. Calibration/Setting

a. Check the settings of the devices to ensure they are properly calibrated. Recalibrate as required. Reference L-O&M Section 200.

b. Check pressure sensors and/or pilots against:

i. a certified deadweight tester (or)

ii. test gauge that has been calibrated with a deadweight tester.

3.5.3. Proper Operation in Control Circuit

a. Ensure each device trips or operates in the circuit as intended.

b. Check controller operation by moving the setpoint away (up or down) from the process variable. Verify that the control device reacts properly. Return the setpoint to its original setting when complete.

c. Ensure that the device sets off the correct alarm as applicable. For each alarm that is listed on the facility safety alarm list, the alarm test at least once each calendar year, not to exceed 15 months will include contacting the responsible control room and confirming with a qualified controller SCADA support personnel the alarm was displayed on the control console and the designation of the alarm was consistent with control system documentation.

d. Ensure that the electrical connections are clean and secure.

e. Check relay coils and contact for excessive temperature or wear.

3.5.4. Pressure-sensing lines

a. Flush pressure-sensing lines and fill with clean product.

3.6. **Overpressure Protection Evaluation and Review**

Pipeline operators shall monitor pressures during all phases of the pipelines operations including start-up, continuous pumping, and shutdowns to ensure that the pipelines are operated within safe limits.

4. Training

Personnel performing pressure limiting and relief device inspections on the pipeline should be qualified under the KM Operator Qualification program.

5. Documentation

Records will be retained per **L-O&M Procedure 1404, Maps and Records**.

Complete **L-OM700-04, Inspection and Tests Performed on Relief and Pressure Switch Equipment** or computer based management system; for inspection of relief valves and/or Pressure Switch Equipment.

Complete **L-OM700-05, Inspection and Tests Performed on Pressure Transmitters and Control Valves** or computer based management system; for inspection of pressure transmitters and/or control valves.

6. References

- 49 CFR Parts 195.428(a), .428(b)
- CSA Z662-7 4.18.1.1&2, 10.7.5.2, 10.7.5.3, 10.7.5.5
- **L-O&M Procedure 155, Management of Change**
- **L-O&M Procedure 1404, Maps and Records**
- **L-O&M Procedure 1700 L-I&M Procedures I-0306.00, I- 0310.00 and I-0522.00**
- **L-OM100-15, Management of Change Form**
- **L-OM700-04, Inspection and Tests Performed on Relief and Pressure Switch Equipment**

- L-OM700-05, Inspection and Tests Performed on Pressure Transmitters and Control Valves
- KM – EHS Process Safety Management (PSM) Program

Attachment 2.a.i
Masonville Pump Station
4/4/2012 Inspection Record

Attachment 2.a.i

KINDER MORGAN COCHIN LLC

Inspections of Pressure Relief Valves and Pressure Switch Equipment

Business Unit/Region: Cochin Pipeline/Charles City Area
Segment Name: Iowa
Segments Covered by This Report: Masonville Pump Station

Item	Location Identification	Set Point	As Found	As Left	SCADA Safety Alarm	Comments examples: recalibrated, changed out, etc.	Date	Inspected By	Control Room Contact
PSV02	Scraper Receiver Trap	1060	920	1055	N/A	Recalibrated for MOP increase - MOC 1136	4/4/2012	BC, GU	N/A
PSV03	Scraper Launcher Trap	1060	979	1057	N/A	Recalibrated for MOP increase - MOC 1136	4/4/2012	BC, GU	N/A
PSV05	Scraper Receiver Bypass	1060	900	1060	N/A	Recalibrated for MOP increase - MOC 1136	4/4/2012	GU, DB	N/A
PSV06	Scraper Launcher Bypass	1060	930	1060	N/A	Recalibrated for MOP increase - MOC 1136	4/4/2012	GU, DB	N/A
PSV07	Strainer Safety Valve	1060	974	1061	N/A	Recalibrated for MOP increase - MOC 1136	4/4/2012	GU, DB	N/A
PSV08	Strainer/Meter Bypass	1060	917	1060	N/A	Recalibrated for MOP increase - MOC 1136	4/4/2012	GU, DB	N/A
PSV09	Mainline Pump Suction	1060	995	1055	N/A	Recalibrated for MOP increase - MOC 1136	4/4/2012	GU, DB	N/A
PSV12	Meter Run	1060	928	1052	N/A	Recalibrated for MOP increase - MOC 1136	4/4/2012	BC, GU	N/A
PS02	Discharge Pressure	973 inc.	660	969	Yes	Recalibrated for MOP increase - MOC 1136	4/4/2012	BC, GU	AD

Attachment 2.a.ii
Masonville Pump Station
10/19/2012 Inspection Record

Attachment 2.a.ii

KINDER MORGAN

Inspections of Pressure Relief Valves and Pressure Switch Equipment

Business Unit/Region: Cochin Pipeline/Charles City Area
Segment Name: Iowa
Segments Covered by This Report: Masonville Pump Station

Item	Location Identification	Set Point	As Found	As Left	SCADA Safety Alarm	Comments examples: recalibrated, changed out, etc.	Date	Inspected By	Control Room Contact
PSV02	Scraper Receiver Trap	1060	1071	1071	N/A		10/15/2012	SF,DL	N/A
PSV03	Scraper Launcher Trap	1060	1080	1080	N/A		10/15/2012	SF,DL	N/A
PSV05	Scraper Receiver Bypass	1060	1070	1070	N/A		10/15/2012	SF,DL	N/A
PSV06	Scraper Launcher Bypass	1060	1070	1070	N/A		10/15/2012	SF,DL	N/A
PSV07	Strainer Safety Valve	1060	1065	1065	N/A		10/15/2012	SF,DL	N/A
PSV08	Strainer/Meter Bypass	1060	1065	1065	N/A		10/15/2012	SF,DL	N/A
PSV09	Mainline Pump Suction	1060	1071	1071	N/A		10/15/2012	SF,DL	N/A
PSV12	Meter Run	1060	1073	1073	N/A		10/15/2012	SF,DL	N/A
PS02	Discharge Pressure	973 INC.	968	972	Y		10/8/2012	SF,DL	AD

Attachment 3
PHMSA Letter dated March 30, 2012

U.S. Department
of Transportation

**Pipeline and
Hazardous Materials Safety
Administration**

901 Locust Street, Suite 462
Kansas City, MO 64106-2641

CERTIFIED MAIL RETURN RECEIPT REQUESTED

TRANSMITTED ELECTRONICALLY [Mr. Ron McClain]

March 30, 2012

Mr. Ron McClain
Vice President – Engineering and Operations
Kinder Morgan Cochin, LLC
500 Dallas St., Suite 1000
Houston, TX 77002

Re: CPF 3-2003-5020H
Operating Pressure – Cochin Pipeline System

Dear Mr. McClain:

The Pipeline and Hazardous Materials Safety Administration (PHMSA) received your request dated February 28, 2012, to increase the operating pressure on the Cochin pipeline system to 1,000 psig. On July 25, 2003 PHMSA issued a Corrective Action Order (Order) to Dome Pipeline Corporation (former operator of the Cochin pipeline system), that was subsequently amended on August 15, 2003. In summary, upon becoming operator of the Cochin system, Kinder Morgan implemented an inline inspection and repair program to verify the integrity of the pipeline. Additionally, confirmatory hydrostatic tests were performed on various sections of the pipeline system. Based upon a review of available information, I approve your request to increase the operating pressure on the Cochin pipeline system to 1,000 psig. If you have questions regarding this matter, please contact me.

Sincerely,

David Barrett
Director, Central Region
Pipeline and Hazardous Materials Safety Administration

Attachment 4.a
Record One, 4/4/2012 Testing

4/4/2012 Testing

Point	Description	Alarm	Control	Event
MSVL23_CCFSPD	U1 PUMP SPEED SETPOINT	2	1	
MSVL23_CCU1R	CCC UNIT 1	3		
MSVL23_CCU1RS	CCC U1 RAMP STOP	2	1	
MSVL23_CCU1RS_S	CCC U1 RAMP STOP STATUS_2	1		
MSVL23_CTLKW	KW PID CONTROLLING	2		
MSVL23_CTLSPD	SPEED PID CONTROLLING	1		
MSVL23_DCRESET	STN RESET		20	
MSVL23_DCU1RS	LOCAL U1 RAMP STOP	1		
MSVL23_EA01	*STN ELECTRICAL FAULT(86-1)	3		
MSVL23_EA03	*PHASE FAIL OR LOW VOLTAGE	4		
MSVL23_EAHH01	STN ELECTRICAL FAULT (86-1)	3	2	
MSVL23_EAHH03	PHASE FAIL OR LOW VOLTAGE	4	2	
MSVL23_FAL30	UNIT LOSS OF FLOW	2	1	
MSVL23_FE0102	PRIMARY FLOW RATE	1	1	
MSVL23_FS06	*FSH06 FLARE STACK FLOW	14		
MSVL23_FS06A	FLARE STACK FLOW	14	7	
MSVL23_FZS01	*U1 MOTOR STARTER FEEDBACK	1		
MSVL23_FZS30	*U1 MOTOR RUN	1		
MSVL23_GD03	PUMP SHED FLOOR GAS DETECTOR		1	
MSVL23_HS05H	UDV HAND SWITCH POSITION	1		
MSVL23_HS05NA	UDV NOT IN AUTO	1	1	
MSVL23_IAH501	SEL 501 STARCO RELAY FAULT	20	10	
MSVL23_JAS01S	MAIN BREAKER OPEN	2	1	
MSVL23_JZS01R	MAIN BREAKER CLOSED	1		
MSVL23_JZS01S	*MAIN BREAKER OPEN	2		
MSVL23_PAHH02	STN DIS PRESS SWITCH HI HI	14	7	
MSVL23_PS02	*STN DIS PRESS HI HI	14		
MSVL23_STNBPS	STATION BYPASS ESD	2		
MSVL23_STNLO	STN LOCKED OUT - LOCAL RESET REQUIRED	2	1	
MSVL23_STNMOS	PERSON ON SITE		2	2
MSVL23_TSC05	*UDV CLOSE TORQUE HI	1		
MSVL23_TSC05A	UDV CLOSE TORQUE HI	1	1	
MSVL23_TSO05	*UDV OPEN TORQUE HI	1		
MSVL23_TSO05A	UDV OPEN TORQUE HI	1	1	
MSVL23_U1LO	U1 LOCKOUT	3		
MSVL23_U1LP	U1 PERMISSIVE LOST	23	11	
MSVL23_U1ORSD	LC- U1 ON OR SDV OPEN ORFLOW	1		
MSVL23_U1RUN	U1 PUMP	3		
MSVL23_U1TRANS	U1 SPEED < 1800 RPM	2		
MSVL23_UDV	UNIT DISCHARGE VALVE	1		
MSVL23_USANDUD	LC- USV AND UDV OPEN ANDFLOW	1		
MSVL23_VAHHPMP	PUMP VIBRATION HI HI	12	6	
MSVL23_XAH05Y	PUMP O/B Y VIBRATION	26	13	
MSVL23_XAHH05Y	PUMP O/B Y VIBRATION	12	6	
MSVL23_XS33	*VFD START READY	2		
MSVL23_XZ32S	VFD RESET ON	4		
MSVL23_ZAF01	MLV VALVE FAULT	2	1	
MSVL23_ZAF02	SSV VALVE FAULT	2	1	
MSVL23_ZAF03	SDV VALVE FAULT	2	1	
MSVL23_ZAF04	USV VALVE FAULT	2	1	
MSVL23_ZAF05	UDV VALVE FAULT	2	1	

Figure No 4

Attachment 4.b
Record two, 10/8/2012 Test Data

10/8/2012

Point	Description	Alarm	Control	Event
MSVL23_CCFSPD	U1 PUMP SPEED SETPOINT	14	7	
MSVL23_CCFSUC	STN SUC PRESS SETPOINT	28	14	
MSVL23_CCU1R	CCC UNIT 1		2	2
MSVL23_CCU1RS	CCC U1 RAMP STOP	1	1	
MSVL23_CTLDIS	DIS PRESS PID CONTROLLING	6		
MSVL23_CTLKW	KW PID CONTROLLING	6		
MSVL23_CTLSPD	SPEED PID CONTROLLING	20		
MSVL23_CTLSUC	SUC PRESS PID CONTROLLING	22		
MSVL23_DCRESET	STN RESET		2	
MSVL23_DCU1RS	LOCAL U1 RAMP STOP	4		
MSVL23_DPA01	MLV DIFF PRESS	2	1	
MSVL23_FAL30	UNIT LOSS OF FLOW	4	2	
MSVL23_FE0102	SR PRIMARY FLOW RATE	4	4	
MSVL23_FZS01	*U1 MOTOR STARTER FEEDBACK	4		
MSVL23_FZS21	LUBE OIL PUMP F/B	6		
MSVL23_FZS30	*U1 MOTOR RUN	4		
MSVL23_HS01H	MLV HAND SWITCH POSITION	3		
MSVL23_HS01NA	MLV NOT IN AUTO	2	1	
MSVL23_HS02H	SSV HAND SWITCH POSITION	5		
MSVL23_HS02NA	SSV NOT IN AUTO	2	1	
MSVL23_HS03H	SDV HAND SWITCH POSITION	5		
MSVL23_HS03NA	SDV NOT IN AUTO	2	1	
MSVL23_HS04H	USV HAND SWITCH POSITION	2		
MSVL23_HS04NA	USV NOT IN AUTO	2	1	
MSVL23_HS05H	UDV HAND SWITCH POSITION	3		
MSVL23_HS05NA	UDV NOT IN AUTO	2	1	
MSVL23_ISDIFF	INLET/SUCTION DIFFERENTIAL	9	5	
MSVL23_JA02	KW REDUCTION	2	1	
MSVL23_JAS01S	MAIN BREAKER OPEN	2	1	
MSVL23_JZS01R	MAIN BREAKER CLOSED	2		
MSVL23_JZS01S	*MAIN BREAKER OPEN	2		
MSVL23_KIORSV	LC- SIV OR SSV ARE OPEN	2		
MSVL23_MLORSD	LC- MLV OR SDV OPEN ORFLOW	6		
MSVL23_MLV	MAINLINE VALVE	2	1	2
MSVL23_PAHH01	STN DIS PRESS XMTR HI HI	8	4	
MSVL23_PAHH04	U1 DIS PRESS XMTR HI HI	4	2	
MSVL23_PAL03	U1 SUC PRESS LO	4	2	
MSVL23_PDS01	*STRAINER DIFF PRESS HI HI	2		
MSVL23_PDAHH01	STRAINER DIFF PRESS HI HI	2	1	
MSVL23_PAHH02	STN DIS PRESS SWITCH HI HI	14	7	
MSVL23_PS02	*STN DIS PRESS HI HI	14		
MSVL23_STNBPS	STATION BYPASS ESD	6		
MSVL23_STNLO	STN LOCKED OUT - LOCAL RESET REQUIRED	2	1	
MSVL23_PSLL24	LUBE OIL TO UNIT	6	3	
MSVL23_PT01	SR STN DIS PRESS	20	10	

10/8/2012
Test Data

MSVL23_PT02	SR STN SUC PRESS	8	4	
MSVL23_PT03	SR U1 PUMP SUC PRESS	8	4	
MSVL23_PT04	SR U1 PUMP DIS PRESS	16	6	
MSVL23_PT05	SR STATION INLET PRESS	7	4	
MSVL23_PT23DEV	PT02/PT03 DEVIATION ALARM	12	6	
MSVL23_PTHH02	STN SUC PRESS HI HI	2	1	
MSVL23_SDV	STATION DISCHARGE VALVE	4	1	2
MSVL23_SSANDSD	LC- SSV AND SDV OPEN ANDFLOW	8		
MSVL23_SSORML	LC- SSV OR MLV OPEN ORFLOW	4		
MSVL23_SSV	STATION SUCTION VALVE	4	1	2
MSVL23_STNMOS	PERSON ON SITE	1	3	2
MSVL23_U1LP	U1 PERMISSIVE LOST	16	8	
MSVL23_U1ORSD	LC- U1 ON OR SDV OPEN ORFLOW	8		
MSVL23_U1RUN	U1 PUMP	9		
MSVL23_U1STDBY	U1 STANDBY 0PCT OUTPUT	2		
MSVL23_U1TRANS	U1 SPEED < 1800 RPM	8		
MSVL23_U1USPD	U1 UNDER SPEED	2	1	
MSVL23_UDV	UNIT DISCHARGE VALVE	2	1	1
MSVL23_USANDUD	LC- USV AND UDV OPEN ANDFLOW	4		
MSVL23_USV	UNIT SUCTION VALVE	2	1	1
MSVL23_XS33	*VFD START READY	6		
MSVL23_ZAF01	MLV VALVE FAULT	8	4	
MSVL23_ZAF02	SSV VALVE FAULT	4	2	
MSVL23_ZAF03	SDV VALVE FAULT	4	2	
MSVL23_ZAF04	USV VALVE FAULT	4	2	
MSVL23_ZAF05	UDV VALVE FAULT	4	2	

Alarm = A count of messages that were transmitted from the field automation to the pipeline control room for the 24 hour period on 10/8/2012 that set off the display flashing and the audible.

Control = A command from the pipeline control room to reset a field alarm. There may not be a one for one reset command to alarms. One reset will address all previous active alarms for that point.

Event = A count of messages that were transmitted from the field automation to the pipeline control room for the 24 hour period on 10/8/2012. This is only a record no display flashing message or audible.

Attachment 5
Control System Pump Station
Cochin Typical

Control Systems Pump Station
Cochin Typical

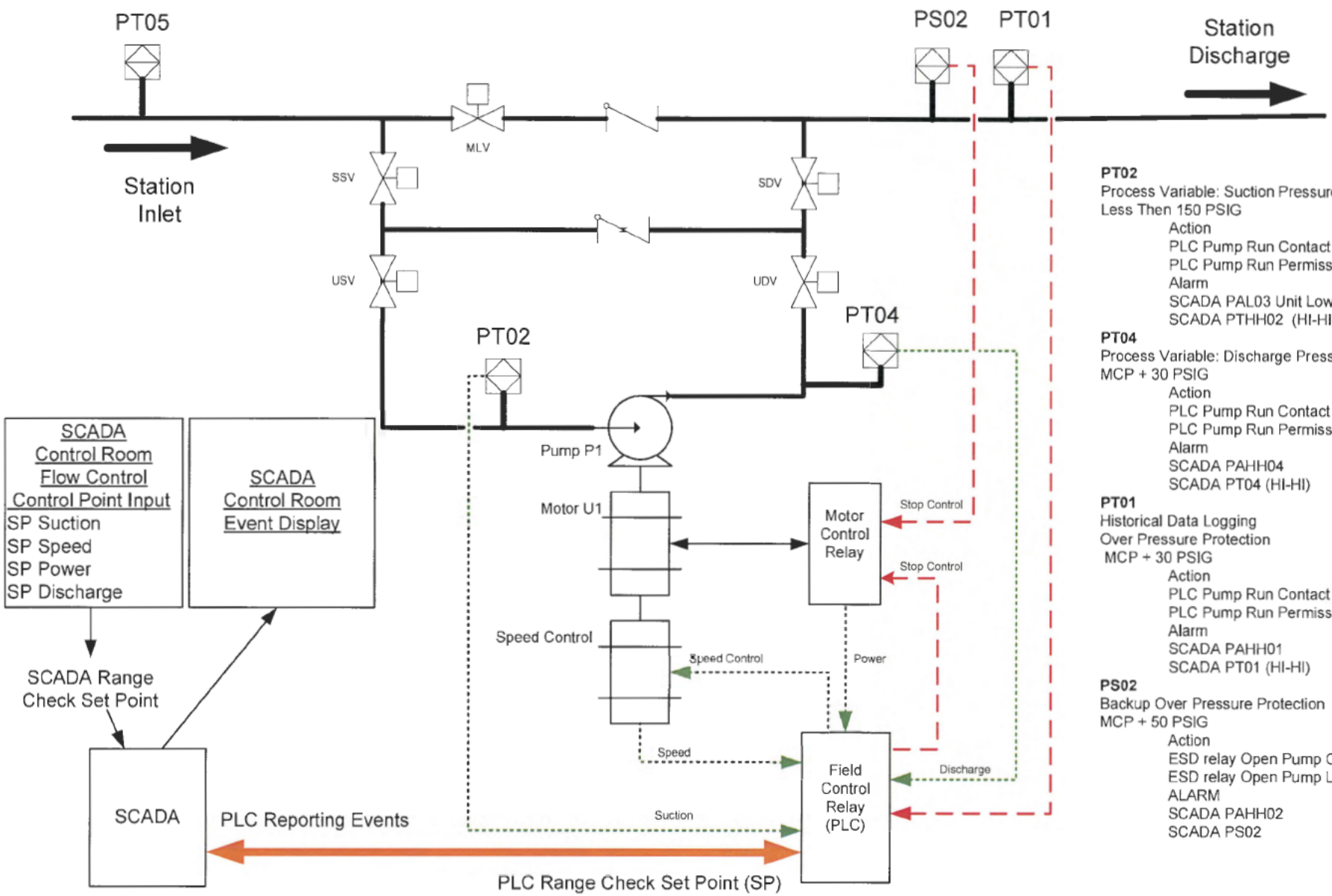

PT02
Process Variable: Suction Pressure
Less Then 150 PSIG
- Action
- PLC Pump Run Contact Low
- PLC Pump Run Permissive Low
- Alarm
- SCADA PAL03 Unit Low Suction
- SCADA PTHH02 (HI-HI)

PT04
Process Variable: Discharge Pressure Control
MCP + 30 PSIG
- Action
- PLC Pump Run Contact Low
- PLC Pump Run Permissive Low
- Alarm
- SCADA PAHH04
- SCADA PT04 (HI-HI)

PT01
Historical Data Logging
Over Pressure Protection
MCP + 30 PSIG
- Action
- PLC Pump Run Contact Low
- PLC Pump Run Permissive Low
- Alarm
- SCADA PAHH01
- SCADA PT01 (HI-HI)

PS02
Backup Over Pressure Protection
MCP + 50 PSIG
- Action
- ESD relay Open Pump Off
- ESD relay Open Pump Lockout
- ALARM
- SCADA PAHH02
- SCADA PS02

Red = Overpressure Protection Device
Green = Process Variable (Speed, Suction Pressure, Discharge Pressure and Power)

Figure No. 1

Feb 1, 2013

Attachment 6
Kinder Morgan Cochin Pipeline, Maintenance / LOTO Procedure Pressure Switches

PURPOSE

The following procedure is for the purpose of instructing the employee in the proper and safe manner of performing the given task.

NOTE: **This is an equipment specific Maintenance Procedure for the Cochin Pipeline and should NOT be used for any other Kinder Morgan entity. This is a supplemental guide to L-O&M 703, Pressure Limiting and Relief Devices and Inspections only and should not replace any procedure listed in L-O&M 703.**

TASK: **Pressure Switch Calibration and Maintenance**

Facility Operating Area: Pressure Control/Monitoring

Associated DOT KM OQ Task Number: Task #104.14 General pipeline repair – component replacement

TASK REQUIREMENTS

PPE Requirement: Standard company requirements
(Reference current KM Cochin PPE Hazard Assessment Document)

Safety References:
L-O&M 103, Safety Permits
L-O&M 120, Personal Protective Equipment
L-O&M 152, Lockout Tagout

Permit References:
L_OM100-22, Safety Permit
L_OM100-50, Lockout Tagout Checklist

Equipment References:
L-O&M 703, Pressure Limiting and Relief Devices and Inspections
L-O&M 1700, Inspection and Maintenance
Pressure Switch Manufacturer's Manual

MSDS References:
Propane
Nitrogen
Rykon Oil

Lockout/Tagout (LOTO): Refer to the Site Specific Equipment Lockout/Tagout Information list in the Pump Station Maintenance Procedure binder for information on safely securing the equipment for maintenance.

For LOTO purpose, an "Authorized" employee is any technician or supervisor that has completed Kinder Morgan's initial and annual training within the Energy Control Program as per L-O&M 152, Lockout Tagout.

PROCEDURE REVISION RECORD				
REV #	DATE	AUTHORITY	REVISOR	REVISION DETAILS
0	2/11/2010			Format update from original Cochin procedures

SCOPE:

This procedure is for calibration and maintenance of pressure switches. Pressure switches are used for status inputs to the PLC for monitoring and controlling pipeline and auxiliary equipment pressure. The pressure switch statuses provided to the PLC are annunciated as alarm indications to the Houston Control Center (HCC) operators through the SCADA system.

PROCEDURE:

Materials & Equipment:

Digital Meter
N2 supply with enough pressure to test the pressure switch
Calibrated pressure gauge (Ametek or equivalent)
Regulator
Connection hose
Lockout locks and tags

CAUTION: **Calibration or maintenance of the pressure switches could cause adverse affects to the pipeline operations, i.e. blocking in the pipeline, loss of pipeline control, etc. Before any calibration or maintenance is performed on the pump station pressure switches, it is advised that the Motor Operated Valve (MOV) breakers be opened and LOTO applied to prevent unintentional stroking of the valves. The unit should be shut down while these tasks are performed.**

NOTE: **Refer to the Site Specific Equipment Lockout/Tagout Information.**

Step 1 – Preparation for Calibration

1.1 Notify HCC of intent to perform calibration or maintenance.

1.2 Fill out Safety/Hot Work Permit and LOTO Checklist in accordance with **L-O&M 103, Safety Permits** and **L-O&M 152, Lockout Tagout.**

Step 2 - Calibration

2.1 Pump stations must be shut down and "locked-out" prior to calibrating pressure switches.

2.2 Isolate the pressure switch by closing the isolation valve. Pressure may be trapped in the tubing which connects the pressure switch to the isolation valve. If the isolation valve is not equipped with a bleed valve, then the pressure must be released by slowly loosening one of the tubing fittings.

2.3 Connect test equipment consisting of a nitrogen supply and an Ametek (or equivalent) electronic pressure calibrator (certified annually to manufacturer's specifications) into the instrument piping.

2.4 Remove the cover from the electrical housing. Remove the wires from the terminals and tape.

2.5 Connect the common and normally open contacts to the Ametek (or equivalent) calibrator (Press Switch). This will allow the calibrator to display and hold the pressure value corresponding to the switch point. Ensure that there is no dash (-) displayed between the pressure value and the pressure label (**0.2 psi** for example). If a dash is present (**0.2-psi**), push the Hold-Reset button. The dash should disappear.

2.6 Calibration should follow the illustrated manufacturer's instructions found in the manufacturer's

instruction manual. An outline of the procedure follows:

2.6.1 Actuate on increasing pressure: Slowly increase the pressure until the switch activates - indicated by the Test light coming on and the dash appearing in the display. The display is now locked at the test pressure. Note this pressure then push the Hold-Reset button to unlock the display. Slowly relieve the pressure until the light goes out and the display again locks. Note the resetting pressure. Adjust the increasing pressure switch point to match the design setting listed on the DOT facility inspection form. After adjusting the switch, repeat the test procedure two more times to check the switch point.

The switch should be repeatable (switch on the same increasing pressure) to within +/- 2% of the full range adjustment of the switch.

Acceptable dead bands (the difference between the set and reset pressure switch points) are listed in the following table:

Type of Switch	*Set Point Range*	*Allowable Dead Band*
Differential Pressure Switch	Set Point from 10 psid to 160 psid	5 psi
Pressure Switch	Set Point from 10 psig to 60 psig	5 psi
Pressure Switch	Set Point from 40 psig to 300 psig	10 psi
Pressure Switch	Set Point from 150 psig to 1200 psig	40 psi
Pressure Switch	Set Point from 600 psig to 3000 psig	100 psi

2.6.2 Actuate on decreasing pressure. Same procedure as #6a above except the decreasing pressure switch point should be set to match the design setting listed on the DOT facility inspection form. The switch tolerances and dead bands are the same as for actuation on increasing pressure.

CAUTION: **Instrumentation power can be supplied to several pieces of equipment from one fuse. Removal of one fuse to lockout a pressure switch can cause power loss to other instrumentation. The technician performing this procedure needs to be familiar with the affect that locking out one pressure switch could have on the operation of the entire pump station.**

NOTE: **During calibration, verify the alarm annunciation on the appropriate DCHMI page.**

NOTE: **PS24 at the VFD Pump Stations does not affect the pipeline valve operation; it is only for the lube oil pump pressure monitoring/control of the lube oil system. The MOV breakers do not need to be opened for PS24 calibration or maintenance.**

CAUTION: **When replacing a pressure switch, use electrical tape to cover the power leads individually to assure the wires do not touch the pressure switch housing, conduit, or each other. Failure to do so could result in damage to the instrumentation power supply.**

NOTE: **A defective device cannot be repaired on site and is required to be sent to a repair facility.**

CAUTION: **Be sure to re-install the conduit and pressure switch fittings as installed on the original pressure switch. Failure to do so could result in damage to, or inaccurate operation of the pressure switch.**

NOTE: **After replacing a device it must be recalibrated using the calibration procedure listed above.**

2.7 If the pressure switch calibration was performed as part of the DOT facility inspection, then the appropriate page of the DOT facility inspection checklist should be completed and submitted to the Office of Record for DOT filing.

If the pressure switch calibration was performed as a maintenance item, then a note to that effect should be recorded on the current pump station log in the remarks section. A Trouble Report should also be completed and submitted to the appropriate Maintenance Center.

Step 3 – Return to Service

3.1 After calibration is complete, relieve test pressure, remove test leads, reconnect signal wires to the switch terminals, replace the electrical housing cover, remove the pressure test equipment, reconnect the tubing between the isolation valve and the pressure switch and slowly open the isolation valve. After the isolation valve has been opened, check for and eliminate any leaks.

NOTE: Complete the Post-Work Closure section of the Lockout/Tagout Checklist prior to returning control to HCC.

3.2 Notify HCC that calibration and/or maintenance is complete.