RECEIVED SEP 15 2016

BUCKEYE PARTNERS, L.P.

Thomas S. (Scott) Collier
Vice President, Performance Assurance
(610) 904-4922
E-Mail: tcollier@buckeye.com

Five TEK Park
9999 Hamilton Blvd.
Breinigsville, PA 18031

September 14, 2016

Mr. Byron Coy
Director, Eastern Region
Pipeline and Hazardous Materials Safety Administration
U. S. Department of Transportation
820 Bear Tavern Road, Suite 103
West Trenton, NJ 08628

RE: CPF 1-2016-5007 – Notice of Probable Violation, Proposed Civil Penalty and Proposed Compliance Order – Genesee River Project

Dear Mr. Coy:

Buckeye Partners, L.P. (Buckeye) is in receipt of the referenced Notice of Probable Violation, Proposed Civil Penalty and Proposed Compliance Order (NOPV) received on August 26, 2016 relating to the construction inspection of Buckeye's Genesee River relocation project which took place between October 2 and November 13, 2015. Upon review of the NOPV Buckeye does not contest this proposed violation.

With regard to the NOPV, Buckeye wishes to clarify that due to its internal welding procedure naming convention, WPS No. P12 dated 11/13/15 has been renamed as WPS No. P15. A copy of the renamed WPS No. P15 has been enclosed. Further since WPS No. P15 was qualified under API Standard 1104 requirements, Buckeye considers this a qualified procedure and is in use today as part of Buckeye's welding program.

If you have any questions, or need additional information, please feel free to contact me or Claudia Pankowski, Director, Regulatory Compliance at 610-904-4185.

Sincerely,

Thomas S. Collier

Thomas S. (Scott) Collier

Enclosure

cc: C. Pankowski
J. Crone
B. Serra
P. Vasko
B. Loy

Date: 09/13/2016

WELD PROCEDURE SPECIFICATION P15

Procedure Qualification Record(s): P15 **Revision Number:** 0

Code/Standard: API Standard 1104, 20th and 21st Edition

Assembly designation: Fixed, Butt Weld

Material Specification: API 5L pipe or ASME, ASTM, ANSI, or MSS carbon steel pipe or fittings with an SMYS equal to that of material specified as API 5L Grade X52.

Diameter: 2.375-30 inches **Wall Thickness:** 0.188 - 0.750 inch **SMYS:** ≈ 52,000 psi

Number of Welders: Weld joint fabrications attaching pipe or fitting 16 in. O.D. and larger shall be performed by two welders operating simultaneously and in opposite quarters unless otherwise approved by the company.

Process: SMAW / Manual **Position:** Fixed, Any positions **Direction:** Vertical down

Welding Current and Polarity: Direct current reverse polarity (DCRP) also known as electrode positive (DCEP)

Electrode AWS Classification: E7010G (Lincoln HYP+) or E7010-P1 (any brand) AWS A5.5 all passes

Cleaning: All passes power wire brush and/or grind as needed. Grind root pass to remove slag from the edges of the groove.

Preheat Temperature: When moisture is present, preheat to 150°F minimum. When ambient or steel temperature is below 50°F, preheat to 150°F minimum. Preheat to 250°F minimum for the following conditions: When the wall thickness of one component is greater than 0.500 inch, or when joining fittings, flanges, and valves regardless of wall thickness or ambient temperature.

Heating Method: Heat pipe to temperature using a propane or oxy-acetylene torch or other company approved method such as resistance or induction heating. Preheat shall be maintained 3 inches from the weld bevel throughout welding.

Temperature Control Method: Monitor temperature using temperature indicating crayons, contact pyrometer or other company approved method.

Interpass Temperature: Minimum interpass temperature is equal to the specified preheat temperature, reheat as necessary. 500°F maximum interpass temperature. Preheat shall be reapplied to any weld allowed to cool below the minimum interpass temperature (preheat).

Time Lapse between Passes: Root & Hot Pass 15 minutes maximum / Hot & First Fill 72 hours maximum.

Post weld heat treatment: N/A

Type of Lineup Clamp: External, or tacked when approved. Tacking shall follow root pass parameters and be at least 2 inches long. When preheat is required it shall be employed when tacking.

Timing for Removal: 50% completion with passes evenly spaced around the circumference.

Welding Technique: Stringer or weave permitted.

Test Location: **Linden, NJ**
Date: **11/13/15**

Welder Name: Scott Berry #4958

PROCEDURE QUALIFICATION RECORD P15

(Actual Conditions)

For **Butt** Welding of **Girth Welds** in Pipe and Fittings **Manual** with the **SMAW** process.

Materials Grade: API 5L X52
Diameter and Wall Thickness (inch): 10.75 X 0.365
Position: 6G / Fixed
Weld Direction: Downhill
Type and removal of lineup clamp: External
Ambient Temperature: N/A
Preheat: None
Number of Welders: One
Time between root and hot pass: N/A
Time between hot pass and first fill pass: N/A

ELECTRICAL CHARACTERISTICS AND ELECTRODE TYPE / SIZE

Bead Identification	Electrode			Voltage Range	Amperage Range	Travel Speed Range (IPM)
	Brand	Size (inch)	Classification			
Root Pass	Lincoln	1/8	E7010-P1	25-27	115-125	6-11
Hot Pass	Lincoln	5/32	E7010-P1	26-28	140-150	5-9
1st Fill	Lincoln	5/32	E7010-P1	26-28	125-135	5-9
2nd Fill	Lincoln	5/32	E7010-P1	26-28	125-135	5-9
1st Stringer	Lincoln	5/32	E7010-P1	26-28	125-135	5-9
2nd Stringer	Lincoln	5/32	E7010-P1	26-28	125-135	5-9

A Stripper pass is a fill pass that does not extend the full length of the weld bevel on ½ of the pipe circumference.

Nick Break Test

Coupon #	1	2	3	4	
Results	Acceptable	Acceptable			
Remarks:					

Reduced Section Tensile Test - Ultimate (Dimensions To Be Actual Measurement)

Coupon #	Dimensions (inch)		Area (A) in^2 (WxT)	Total Load (L) Pounds (lb)	Unit Stress PSI (L/A)	Character of Failure and Location
	Width	Thickness				
T1	0.989	0.366	0.361	25,000	69,252	base material
T2	1.019	0.359	0.365	25,000	68,493	base material

Guided Root Bend Test

Coupon #	1	2		
Root	Acceptable	Acceptable		

Guided Face Bend Test

Coupon #	1	2		
Face	Acceptable	Acceptable		

TESTED BY: **Brendon R. Smith CWI 020450251** TITLE: **AWS Certified Welding Inspector**

Date: 09/13/2016

WELD PROCEDURE SPECIFICATION P15

Pass	Electrode		Welding Parameters		Travel Speed (ipm)
	Class.	Size (inch)	Amps	Volts	
Root	E7010G or E7010-P1	1/8 or 5/32	70-130 90-175	20 to 30	5 to 15
Hot	E7010G or E7010-P1	1/8 or 5/32	75-130 100-185	22 to 30	5-15
Fill(s)	E7010G or E7010-P1	1/8 5/32 or 3/16 or	75-130 100-185 140-225	22 to 32	5-15
Cap(s)	E7010G or E7010-P1	1/8 5/32 or 3/16 or	75-130 100-185 140-225	22 to 32	5-15

Additional fill passes shall be added as necessary to fill the groove.

Joint Design and Bead Sequence

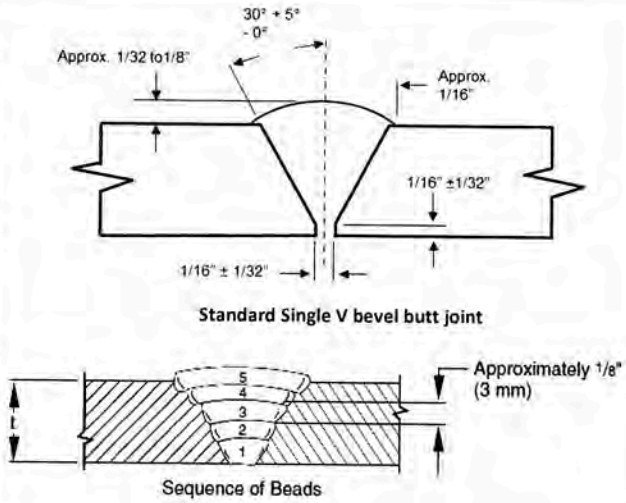

No backing required

Procedure Qualification Pipe: API 5L X52, 10.75 OD by 0.365 inch wall thickness

This procedure is qualified and written to the requirements of the 20th & 21st editions of API 1104

The procedure is approved and was witnessed by:

AWS
Brad Etheridge
CWI 13030471
QC1 EXP. 3/1/2019
8/16/16

The procedure is adopted by:

Signature: 7493 Date: 9/13/16

Position: Senior Manager, Engineering and Design