Application of Remote Field Eddy Current to Inspection of Unpiggable Pipelines

Contract DTRS56-02-T-0001

Co-funding by PRCI

Gary Burkhardt

Southwest Research Institute

Project Review Meeting

March 24, 2005

Why Are Some Pipelines Uninspectable?

- Some pipelines have restricted internal diameters
  - Valves (plug valve is most difficult because of narrow keystone-shaped opening)
  - Tight bends
  - Dual diameter pipe
- Magnetic flux leakage pigs cannot tolerate significant diameter reductions
  - Large magnets cannot collapse

Restriction from Plug Valve

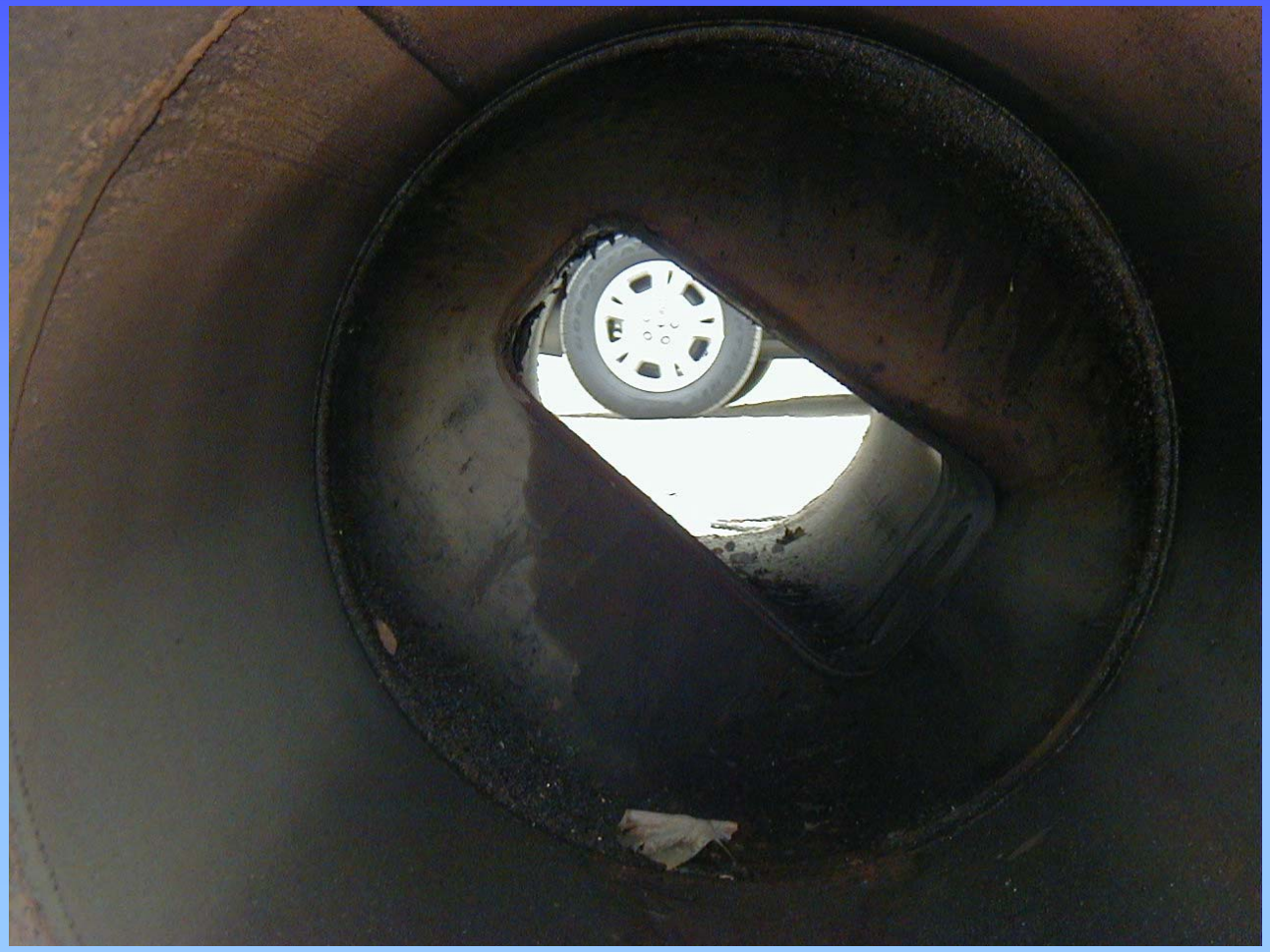

Restriction from Bend

Need

- A pipeline inspection method that:
  - Is sensitive to pipe wall material loss
  - Can be implemented from an internal inspection pig
  - Is small enough or can partially collapse to allow passage through internal restrictions

Approach — Remote-Field Eddy Current (RFEC)

- RFEC has been applied to pipe inspection
- RFEC has traditionally been used with a rigid excitation coil
  - Some reduction in coil size can be tolerated, but sensitivity is reduced
- New approach — collapsible coil
  - Would allow full-size coil to collapse and pass through restrictions

Conventional RFEC Configuration

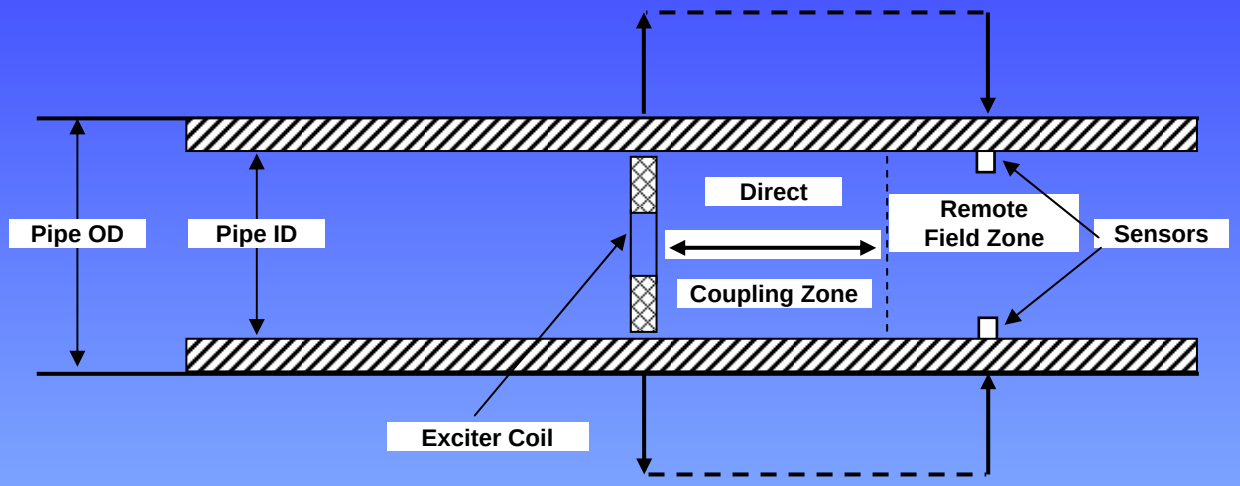

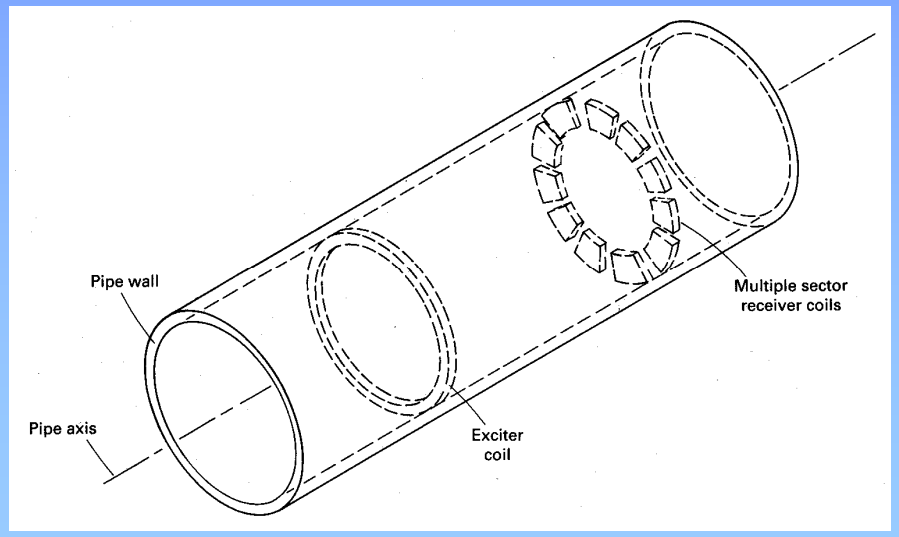

Collapsible Coil Approach

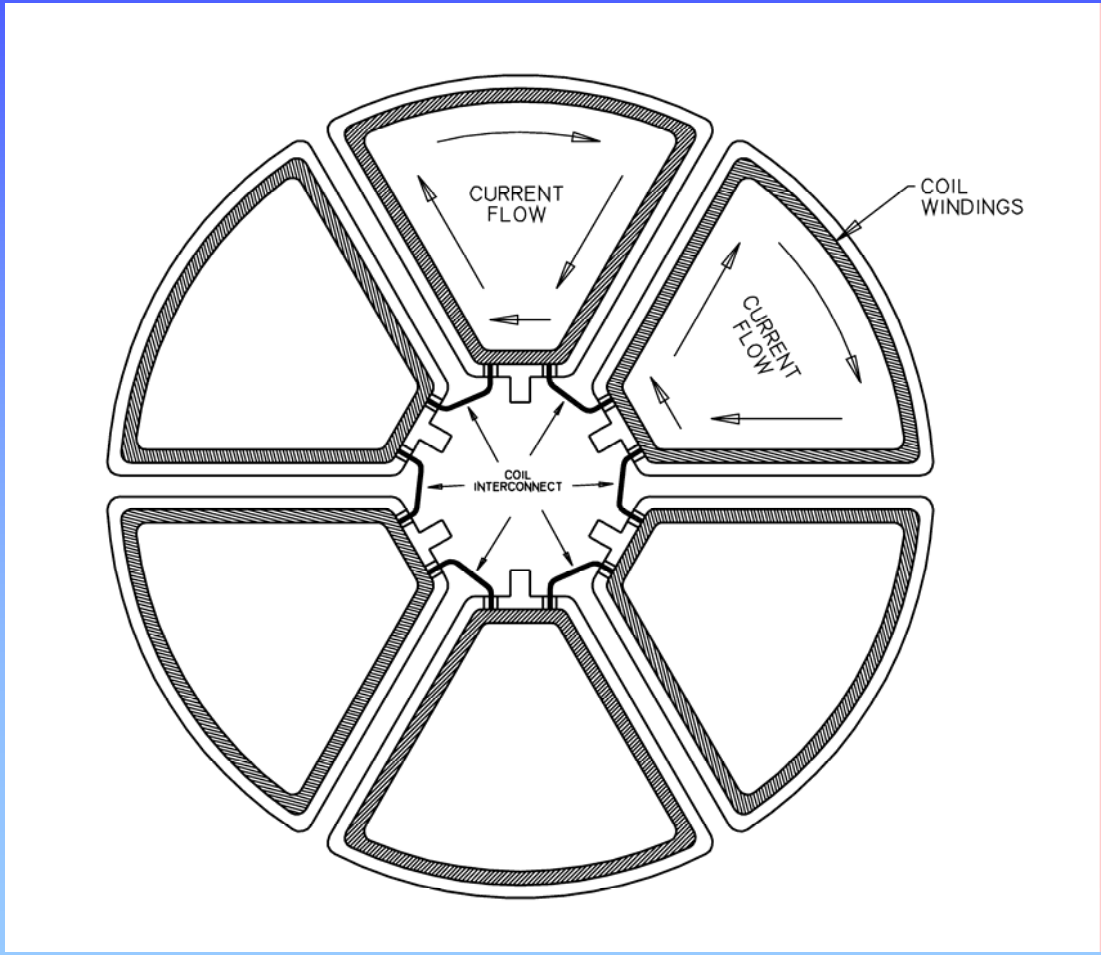

Project Work Plan

- Technology assessment
- RFEC coil design
- Laboratory breadboard system development
- RFEC evaluation
- Demonstration at PSF
- Reporting and meetings

Unpiggable Pipeline Assessment

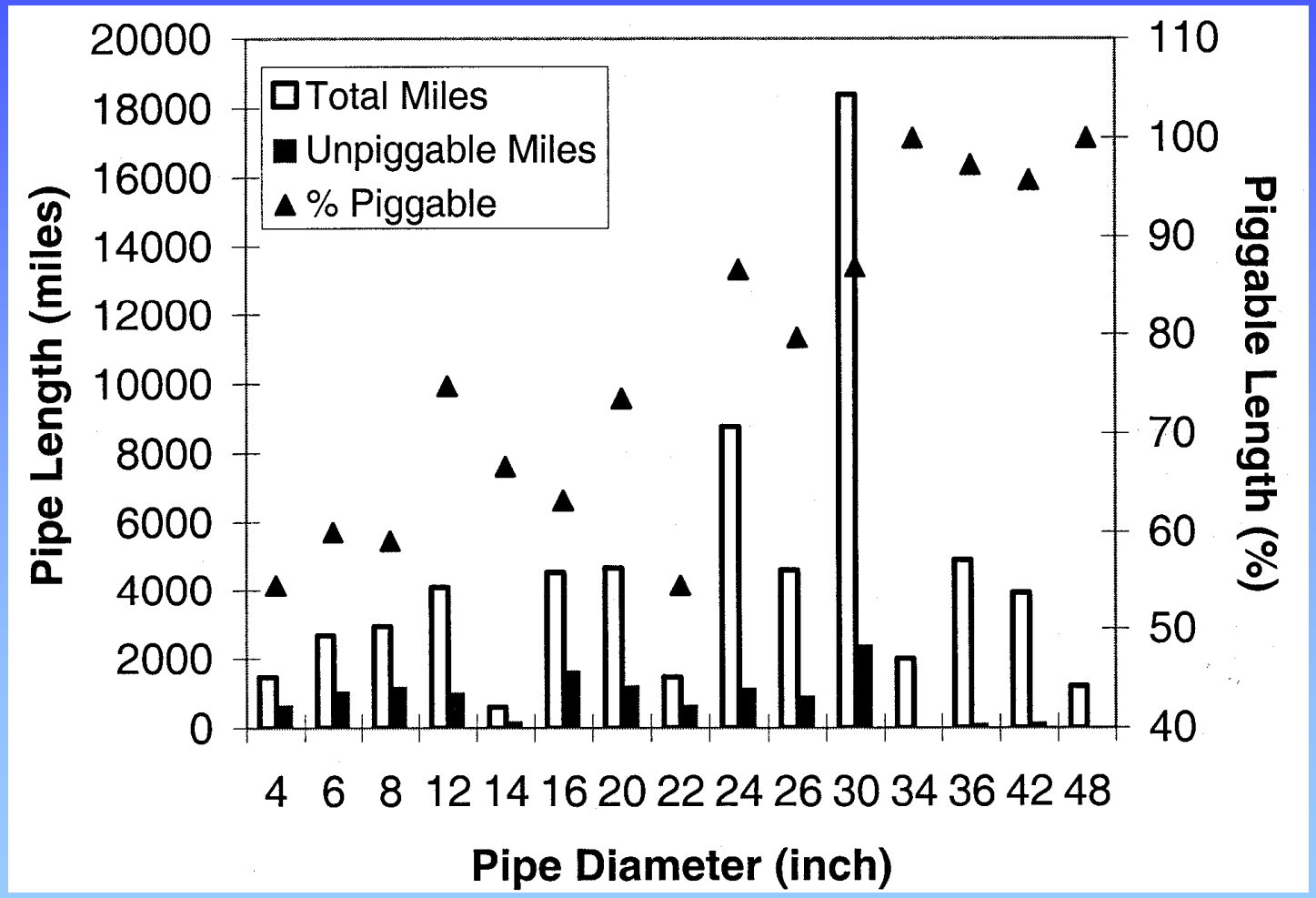

Technology Assessment Results

- Target pipe size range 4–22 inches in diameter
- Target obstacles
  - Reduced port valves (primarily plug valves)
  - Bend radii smaller than 1.5 diameter
- Platforms for RFEC system are nonconventional, self-powered pigging devices currently under development by others

Fully Deployed Collapsible Coil Configuration

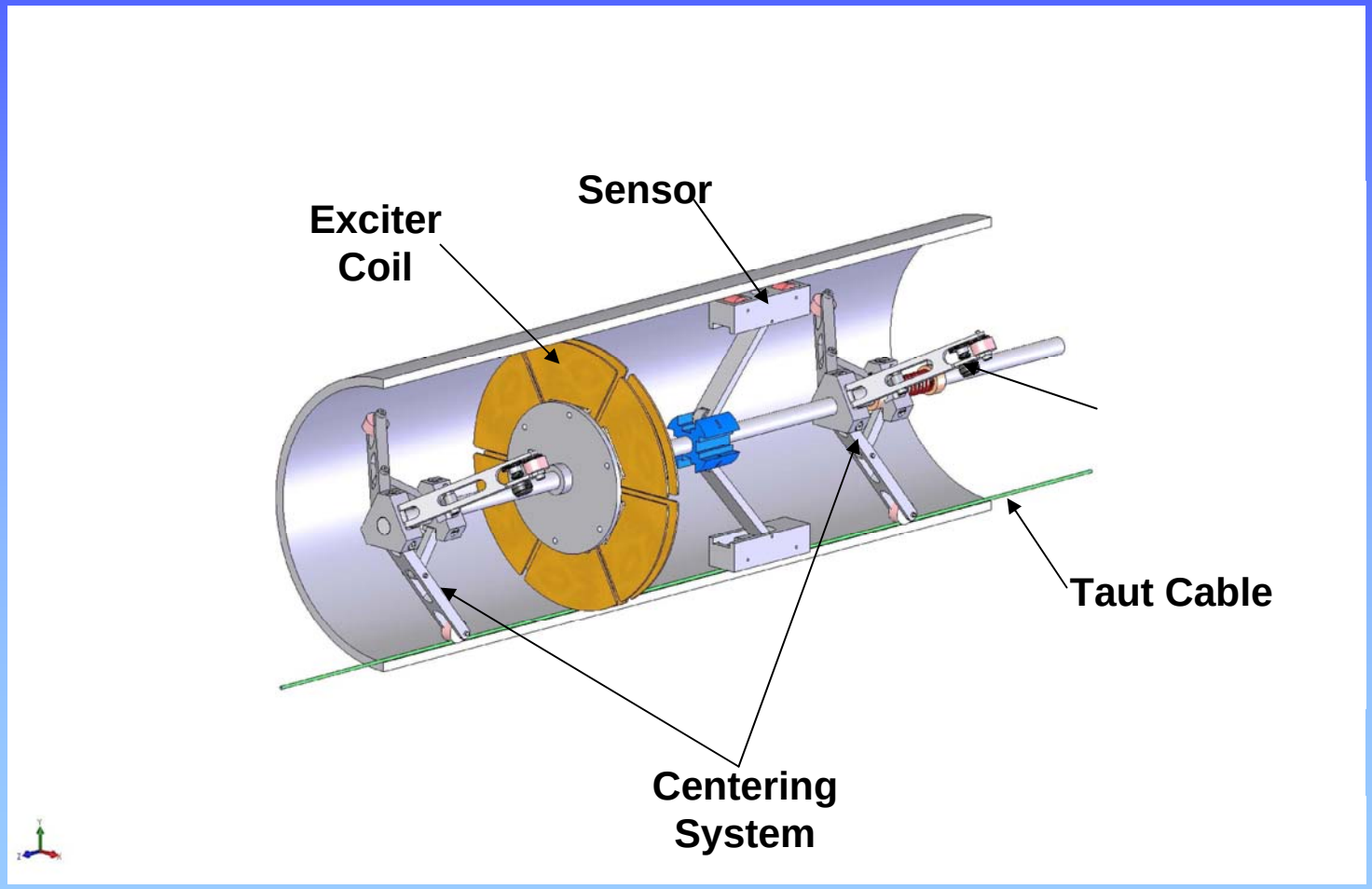

Folding Configuration for Plug Valve

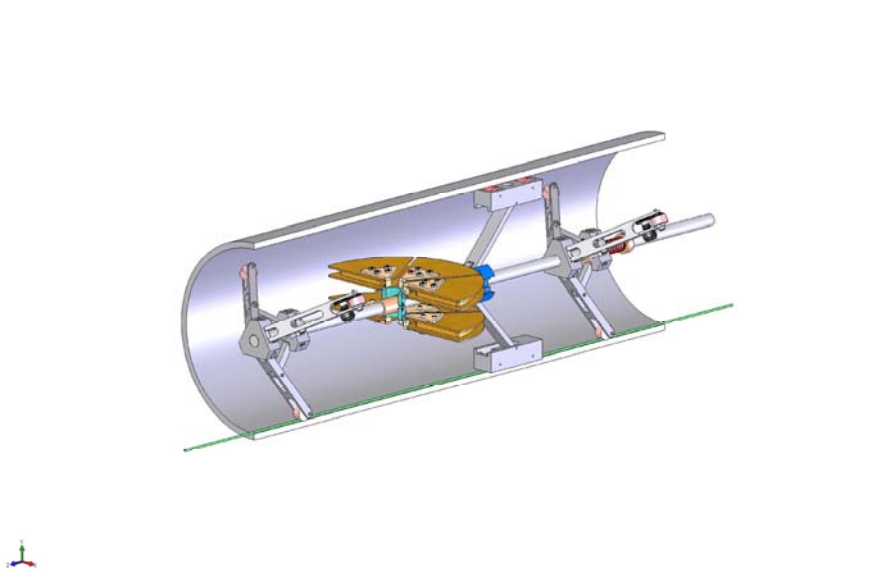

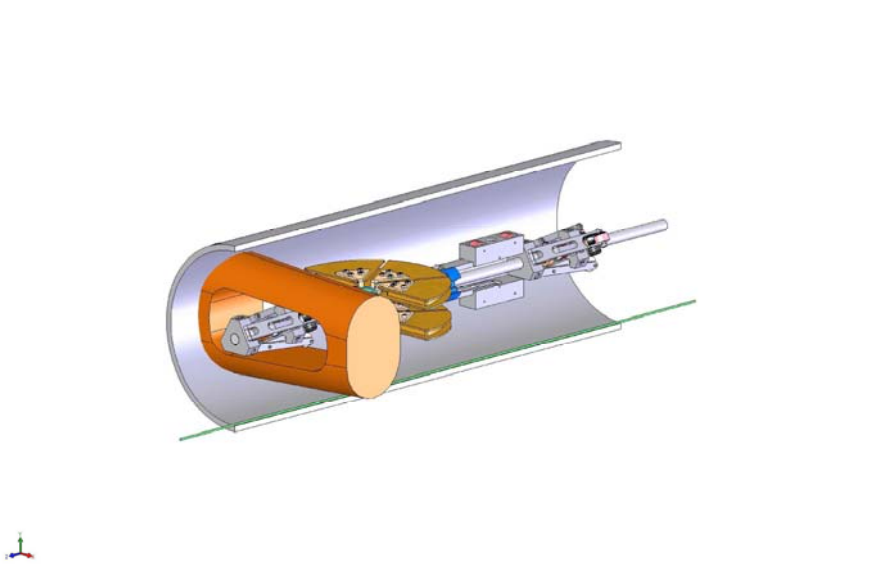

Collapsing Configurations for Reduced Diameter Restrictions

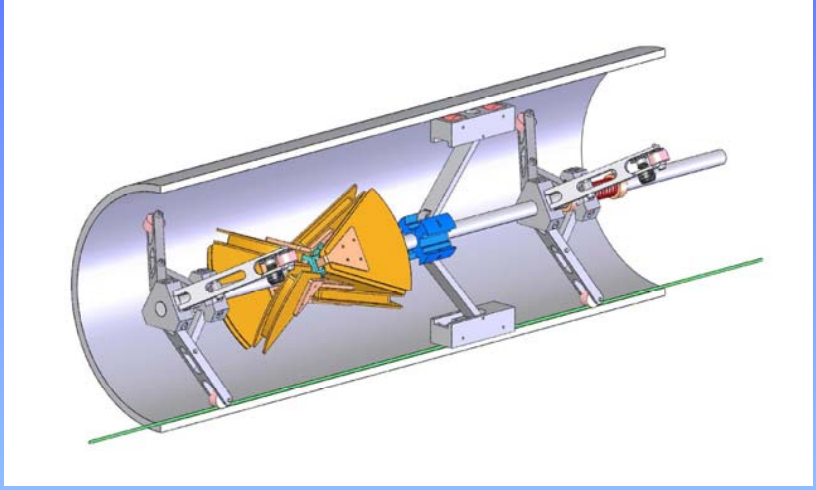

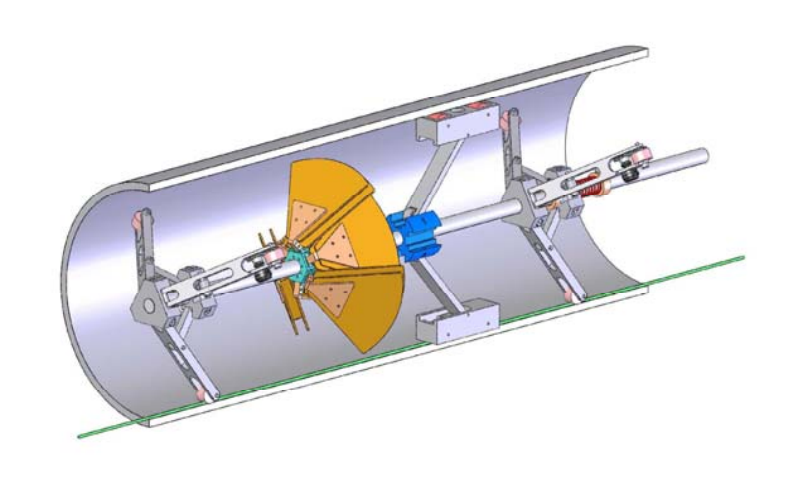

Small-Diameter Conventional Coil

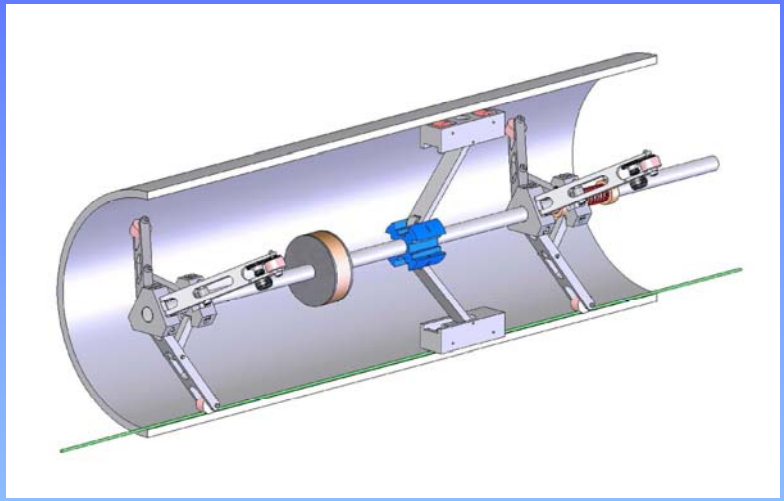

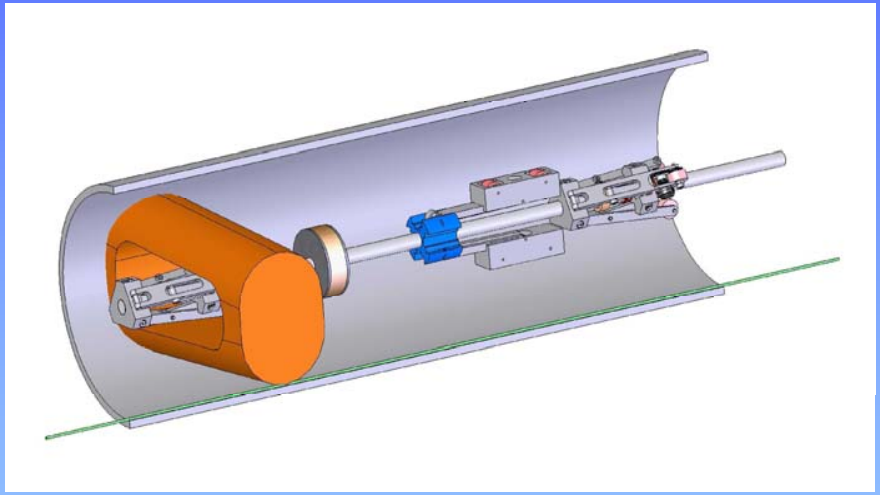

Collapsible Coil

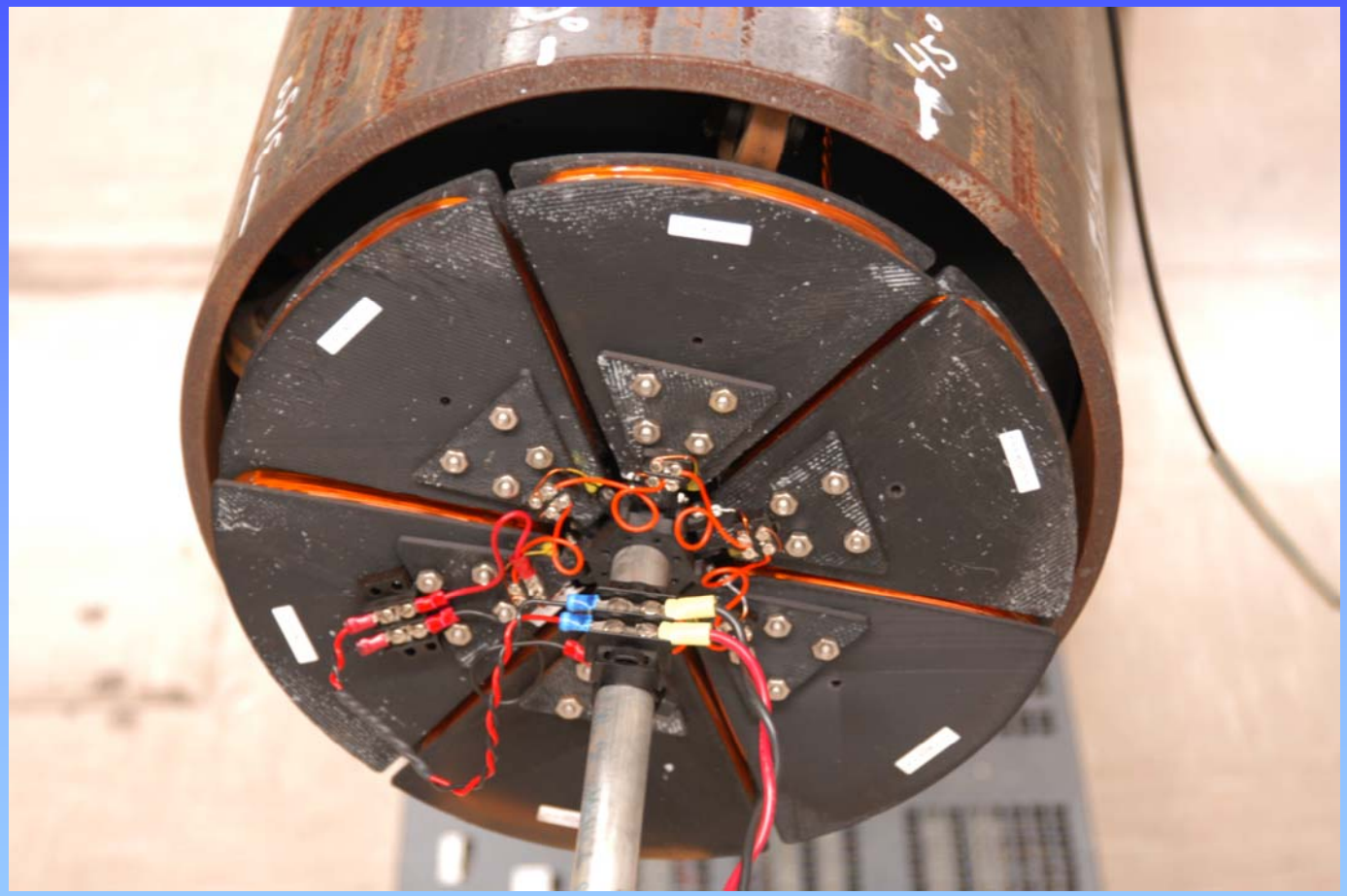

Sensor Fixture

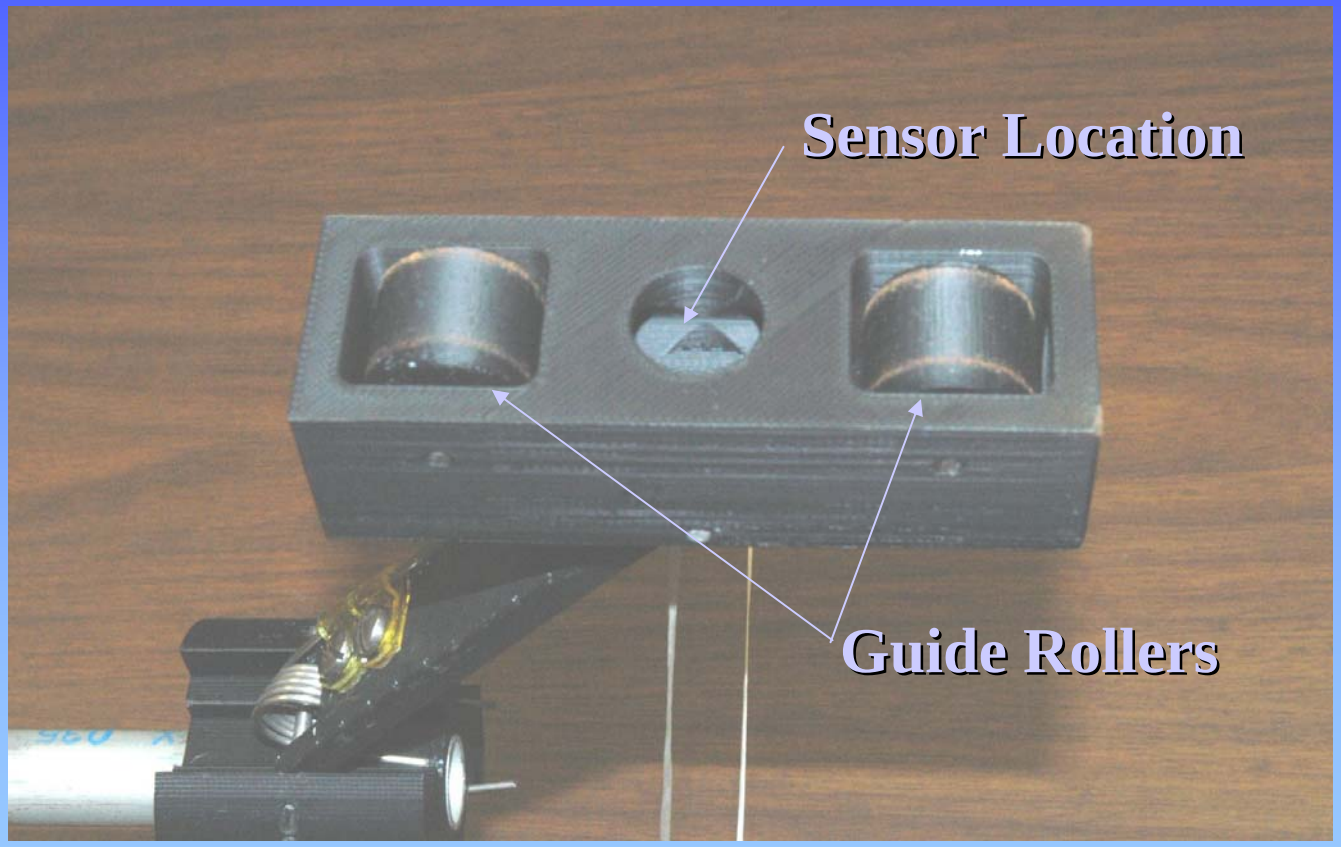

Coil Comparison

- Full-size conventional coil (for baseline)
- Full-size collapsible coil
- Smallest conventional coil that will pass through a plug valve (3.5 in. diameter)

Coils Evaluated

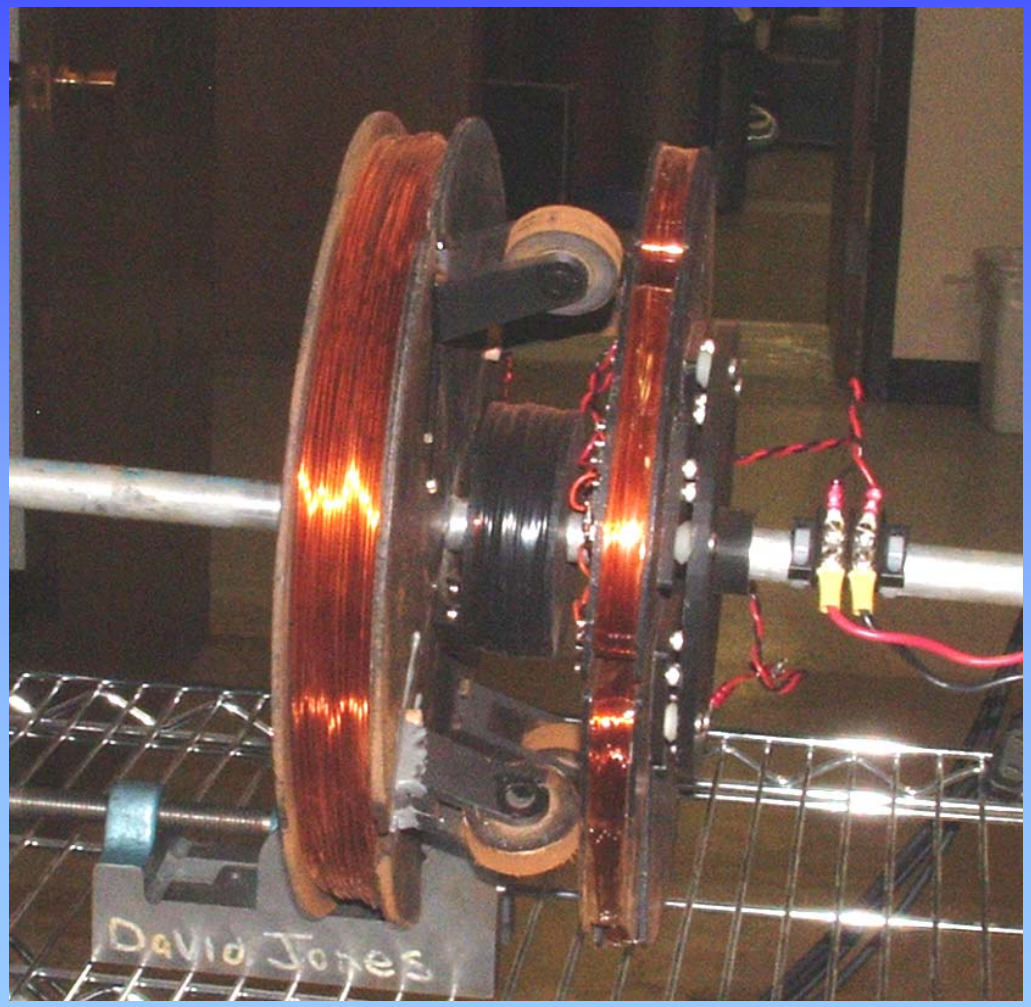

Simulated Corrosion Defects

12-in. dia. × 0.375 in. seamless pipe

2-inch diameter, 25%, 50%, 75% wall

Signals from Large Conventional and Collapsible Coils

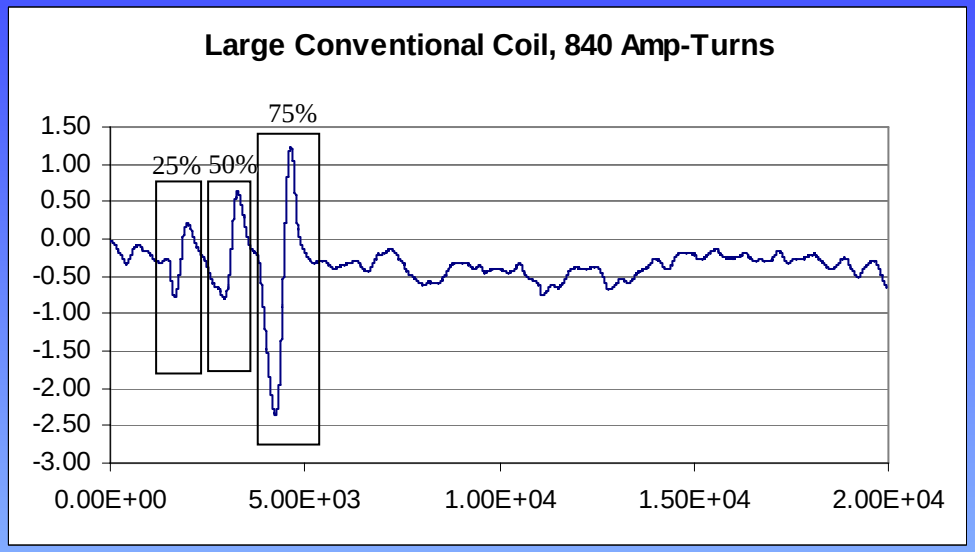

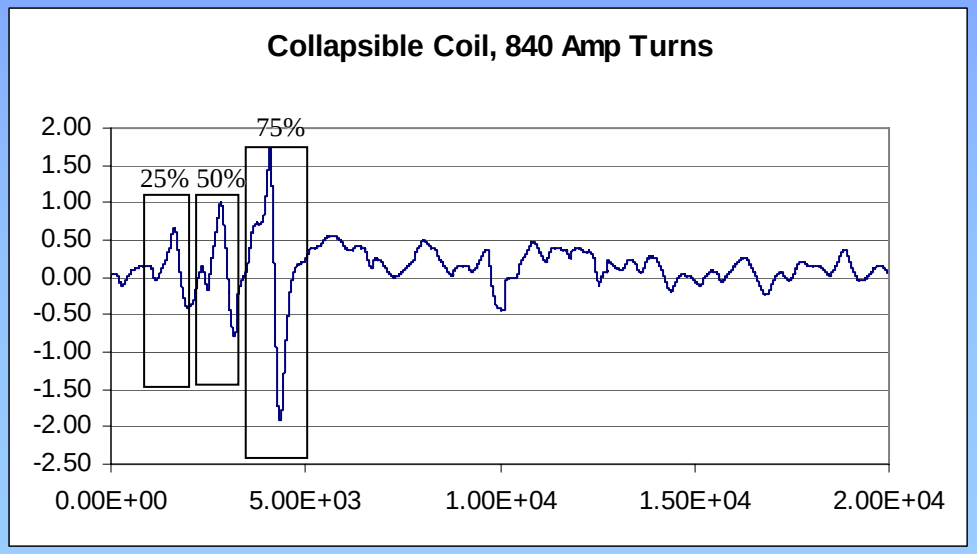

Experimental Results

- Collapsible coil signals compare favorably with conventional full-size coil using same ampere-turns
- Small conventional coil requires approximately 7 times more ampere-turns to achieve comparable results

Demonstration at Pipeline Simulation Facility (September 13–17, 2004)

- 12-in. dia. × 0.375-in. wall pipe
- New seam-welded pipe with machined defects
- Used seamless pipe with natural corrosion
- Blind tests with a few calibration flaws

Breadboard Demonstration RFEC System

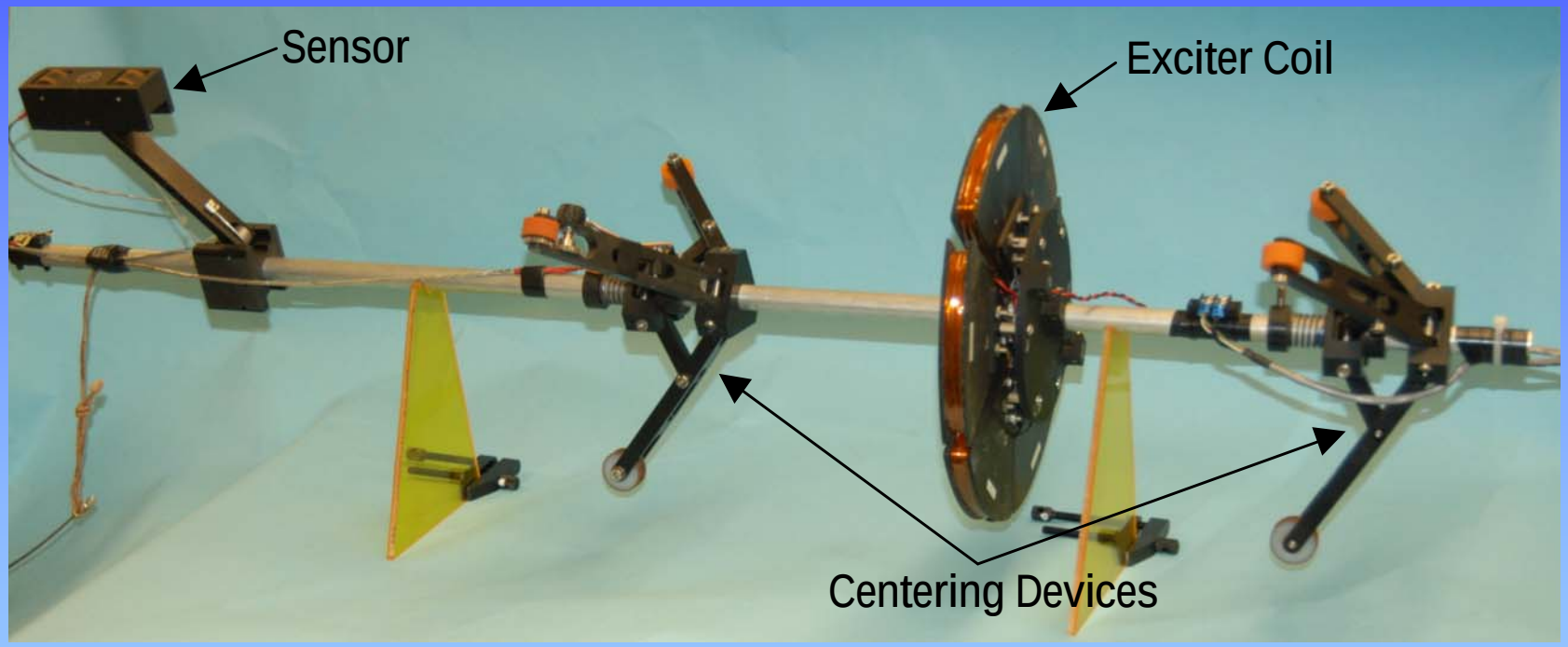

RFEC System in Test Pipe

Pipes Used for Blind Tests

New Pipe with Machined Defects **Used Pipe with Natural Corrosion**

Typical Defects

Machined

Natural Corrosion

Data from New Seam-Welded Pipe with Manufactured Flaws — Line 1

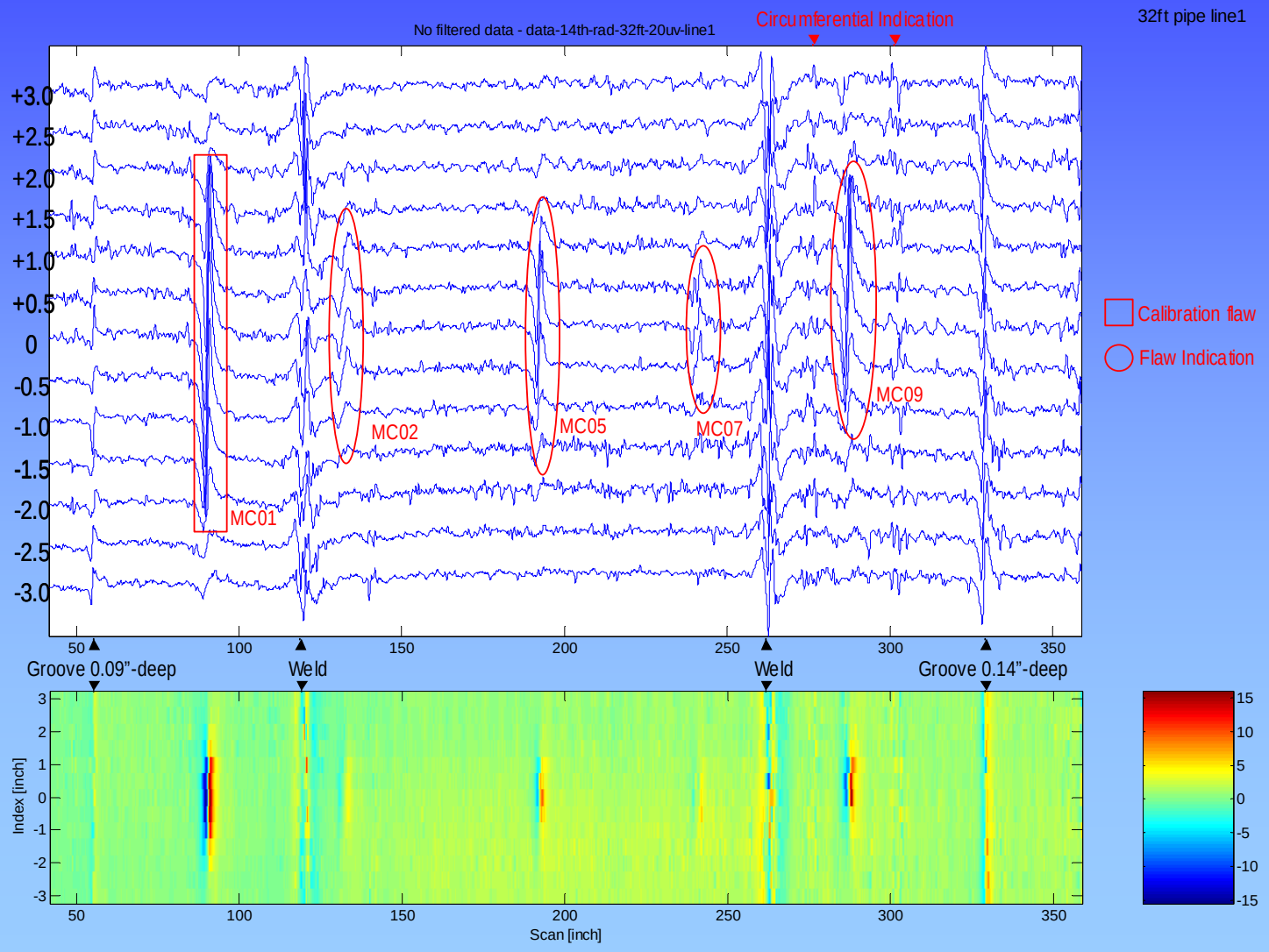

Filtered Data from Used Seamless Pipe with Natural Corrosion

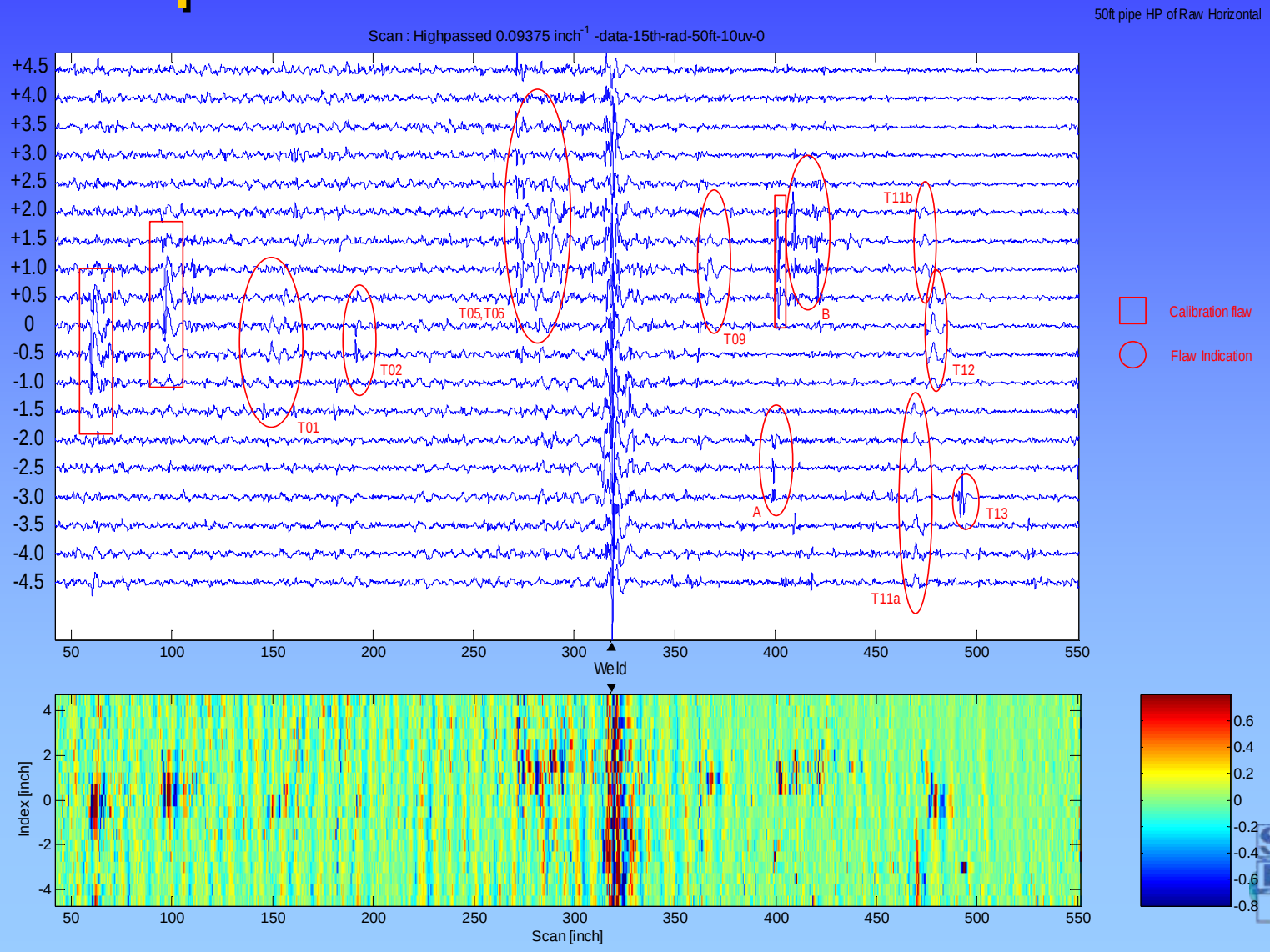

Comparisons of Measured Flaw Characteristics

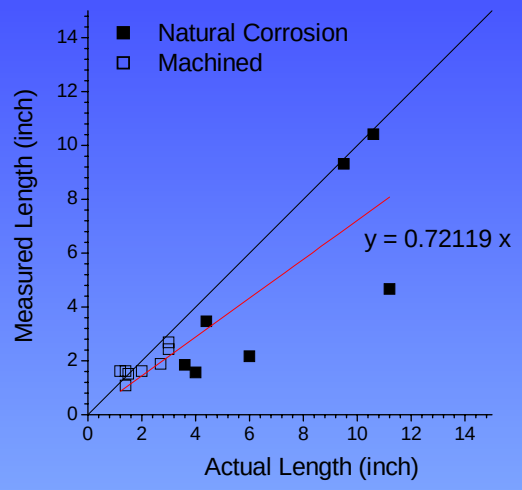

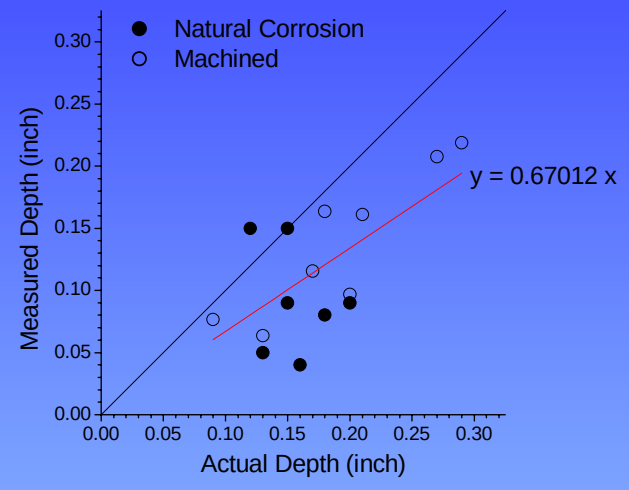

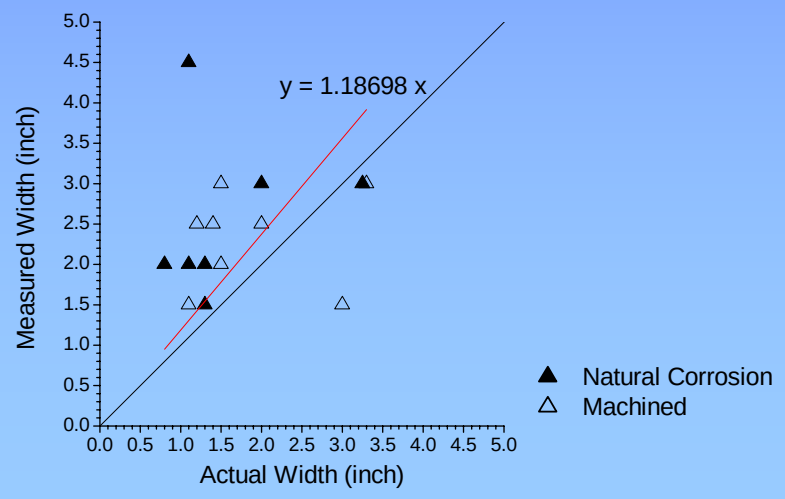

Project Results

- Collapsible coil feasible
- Good correlation in blind tests between predicted and actual defect parameters (length, width, depth)
- Seamless pipe results good, even though corrosion had complex shapes and signal levels 20% of those from seam-welded pipe
- Strong potential demonstrated for collapsible system adaptable to robotic inspection vehicle
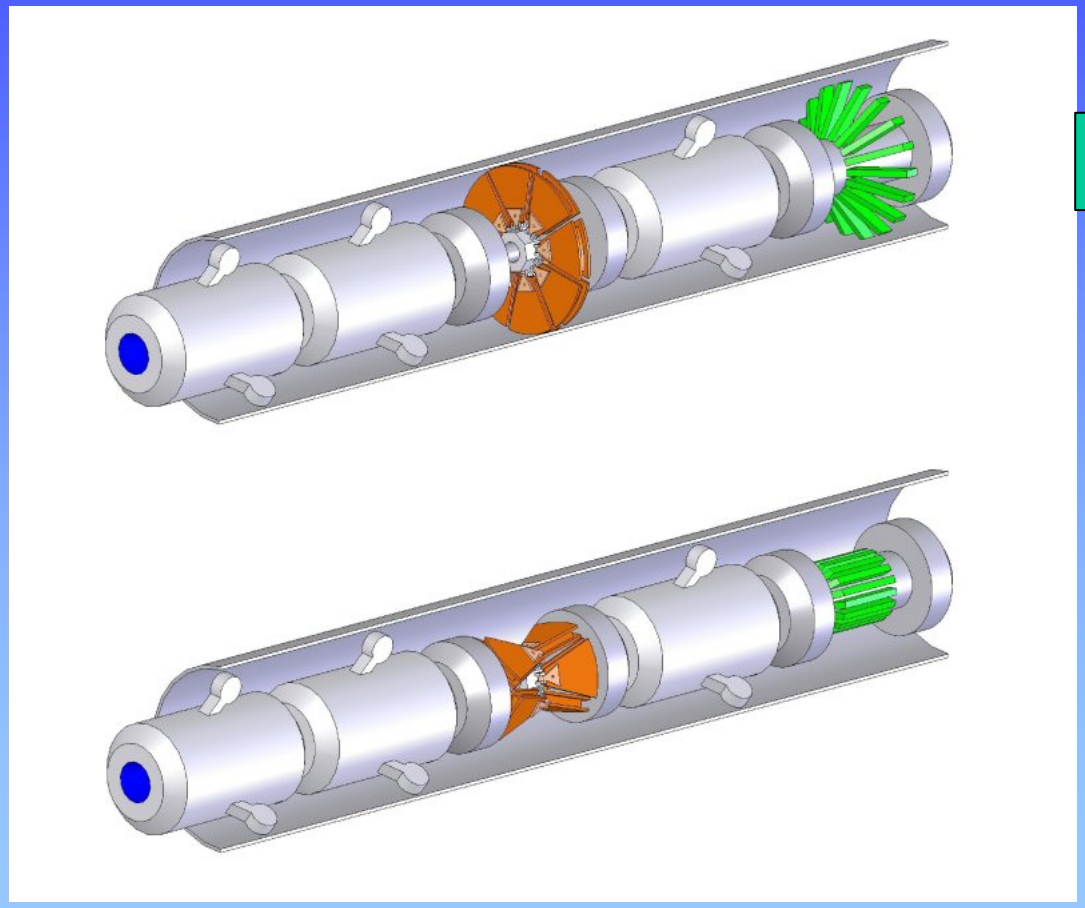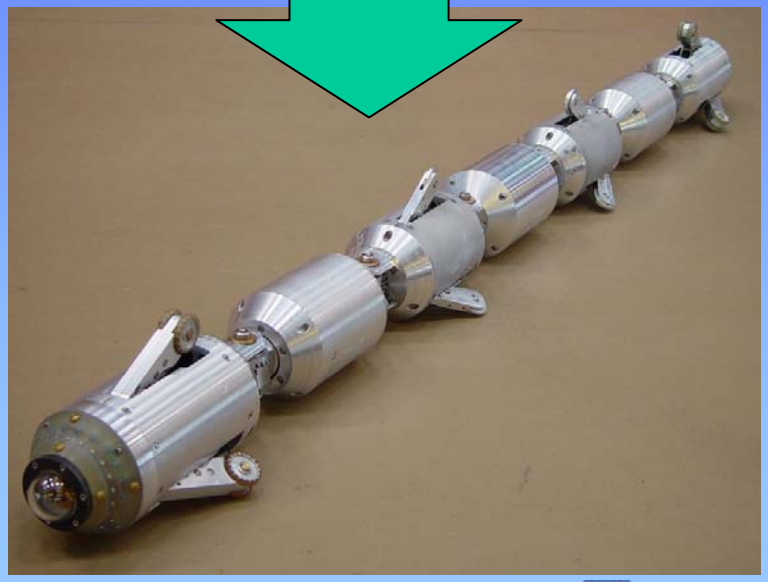
Requested Follow-On: Apply System to CMU Explorer Robot